EVAL-M3-102T User Manual

iMOTION™ Modular Application Design Kit

About this document

Scope and purpose

This User Manual provides an overview of the evaluation board EVAL-M3-102T including its main features, key data, pin assignments and mechanical dimensions.

EVAL-M3-102T is an evaluation-board as part of the iMOTION™ Modular Application Design Kit. This board features and demonstrates Infineon's Advanced Motion Control Engine (MCE 2.0) technology for permanent magnet motors drive over the full speed range.

The evaluation board EVAL-M3-102T was developed to support customers during their first steps designing applications with running any permanent magnet motor via sensorless sinusoidal control.

Intended audience

This User Manual is intended for all technical specialists who know motor control and high power electronics converter and this board is intended to be used under laboratory conditions.

Table of contents

About this document **1**
Table of contents **1**
1 Safety precautions **3**
2 Introduction **4**
3 EVAL-M3-102T main features **5**
3.1 Functional description 6
3.2 IMC102T-F064 pinout description 7
3.3 EVAL-M3-102T board specifications 9
3.4 Pin assignment 10
4 Getting Started with EVAL-M3-102T **14**
4.1 Setting up the system 14
4.2 iMOTION™ development tools and software 16
4.2.1 MCEWizard setup overview 16
4.2.2 MCEDesigner setup overview 18
5 Hardware description of EVAL-M3-102T **21**
5.1 Motor Current feedback circuitry 21
5.1.1 Motor Shunt configuration 21
5.1.2 Motor External Current feedback configuration and calculation 21
5.1.3 Motor Internal Current feedback amplifier gain configuration 23
5.2 PFC Hardware configuration 24
5.2.1 PFC Topology selection 24
5.2.2 PFC External Current feedback configuration and calculation 24
5.2.3 PFC Internal Current feedback amplifier gain configuration 25
5.2.4 AC Voltage sensing configuration 26
5.3 EVAL-M3-102T analog inputs and their MCEWizard setup 27

Table of contents

5.3.1 DC bus sensing configuration 28
5.3.2 NTC shutdown value calculation and configuration 28
5.3.3 VSP analog input control mode and PGout configuration 30
5.4 Schematics overview 33
5.5 PCB layout overview 34
6 Bill of material 36
7 Reference 39
Revision history 40

1 Safety precautions

In addition to the precautions listed throughout this manual, please read and understand the following statements regarding hazards associated with development systems.

Table 1 Precautions

	***Attention: The ground potential of the EVAL-M3-102T system is biased to a negative DC bus voltage potential. When measuring voltage waveform by oscilloscope, the scope's ground needs to be isolated. Failure to do so may result in personal injury or death and equipment damage***
	***Attention: Only personnel familiar with the drive and associated machinery should plan or implement the installation, start-up and subsequent maintenance of the system. Failure to comply may result in personal injury and/or equipment damage.***
	***Attention: The surfaces of the drive may become hot, which may cause injury.***
	***Attention: EVAL-M3-102T system contains parts and assemblies sensitive to Electrostatic Discharge (ESD). Electrostatic control precautions are required when installing, testing, servicing or repairing this assembly. Component damage may result if ESD control procedures are not followed. If you are not familiar with electrostatic control procedures, refer to applicable ESD protection handbooks and guidelines.***
	***Attention: A control board, incorrectly applied or installed, can result in component damage or reduction in product lifetime. Wiring or application errors such as under sizing the motor, supplying an incorrect or inadequate DC supply or excessive ambient temperatures may result in system malfunction.***
	***Attention: Remove or connect this control board from or to the power drive. Wait three minutes after removing power from the power drive to discharge the bus capacitors. Do not attempt to service the drive until the bus capacitors have discharged to zero. Failure to do so may result in personal injury or death.***
	***Attention: EVAL-M3-102T system is shipped with packing materials that need to be removed prior to installation. Failure to remove all packing materials which are unnecessary for system installation may result in overheating or abnormal operating condition.***

2 Introduction

The EVAL-M3-102T evaluation board is a part of the iMOTION™ Modular Application Design Kit for drives (iMOTION™ MADK). In order to run a motor, the mating power board is required to interface this evaluation board.

The MADK platform is intended to use various power stages with different control boards. These boards can easily be interfaced through the 30-pin iMOTION™ MADK M3, or the 30-pin iMOTION™ MADK M3 interface connector. This board is equipped with 30-pin M3 connector and is intended for power factor correction and single motor control only.

This evaluation board is designed to give comprehensible solutions of sensorless control of permanent magnet motors over the full speed range. It provides a capable of 3-phase and type 3 of 2-phase modulation, a micro-USB connector and on board debugger isolated by digital isolator, and UART interface.

The EVAL-M3-102T evaluation board is available from Infineon. The features of this board are described in the main feature chapter of this document, whereas the remaining paragraphs provide information to enable the customers to copy, modify and qualify the design for production according to their own specific requirements.

Environmental conditions were considered in the design of the EVAL-M3-102T, but it is not qualified regarding safety requirements or manufacturing and operation over the whole operating temperature range or lifetime. The boards provided by Infineon are subject to functional testing only.

Evaluation boards are not subject to the same procedures as regular products regarding Returned Material Analysis (RMA), Process Change Notification (PCN) and Product Discontinuation (PD). Evaluation boards are intended to be used under laboratory conditions by technical specialists only.

Figure 1 shows the evaluation board EVAL-M3-102T. This document explains the features and details of this board as well as control IC which is IMC102T-F064.

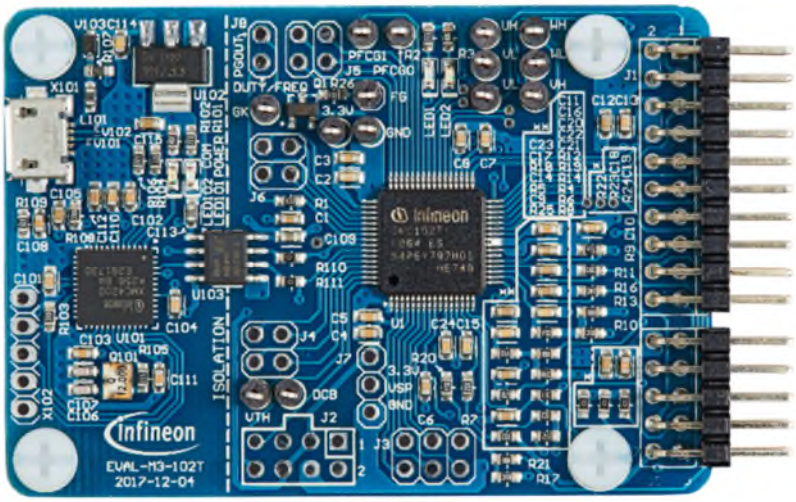

Figure 1 Evaluation board EVAL-M3-102T

3 EVAL-M3-102T main features

EVAL-M3-102T is an evaluation control board for motor control applications. The kit demonstrates Infineon's motion control IC technology.

Main features of the IMC102T-F064 Motion Control IC are:

- MCE (Motion Control Engine) as ready-to-use solution for variable speed drives
- Field oriented control (FOC) for permanent magnet synchronous motor (PMSM)
- Space vector PWM with sinusoidal commutation and integrated protection features
- Current sensing via single or leg shunt
- Sensorless operation
- Active boost or totem pole PFC control integrated
- Various serial communication interfaces (UART, I2C, SPI)
- Multiple motor parameter support
- 3.3V (default) or 5V VDD power supply
- Flexible host interface options for speed commands: UART, I2C, SPI, PWM or analog signal
- Support for IEC 60335 ('Class B')
- Scalable package options

The evaluation board characteristics are:

- Complete kit for running any permanent magnet motor via sensorless sinusoidal control
- 3.3V (default) or 5V VDD power supply
- Micro-USB connector and on-board debugger isolated by digital isolator
- Capable of 3-phase and type 3 of 2-phase modulation
- RoHS complaint
- PCB size is 65 x 45 mm

3.1 Functional description

Figure 2 shows a typical motor control application block diagram using the IMC102T-F064. The IMC102T-F064 provides a built-in closed loop sensorless control algorithm using the unique flexible Motion Control Engine (MCE) for permanent magnet motors and additionally a boost or totem pole power factor correnction (PFC). The MCE™ consists of a collection of control elements, motion peripherals, a dedicated motion control sequencer and internal memory to map internal signal nodes. IMC102T-F064 also employs a unique single shunt current reconstruction circuit in addition to leg shunt current sensing circuit to eliminate additional analog/digital circuitry.

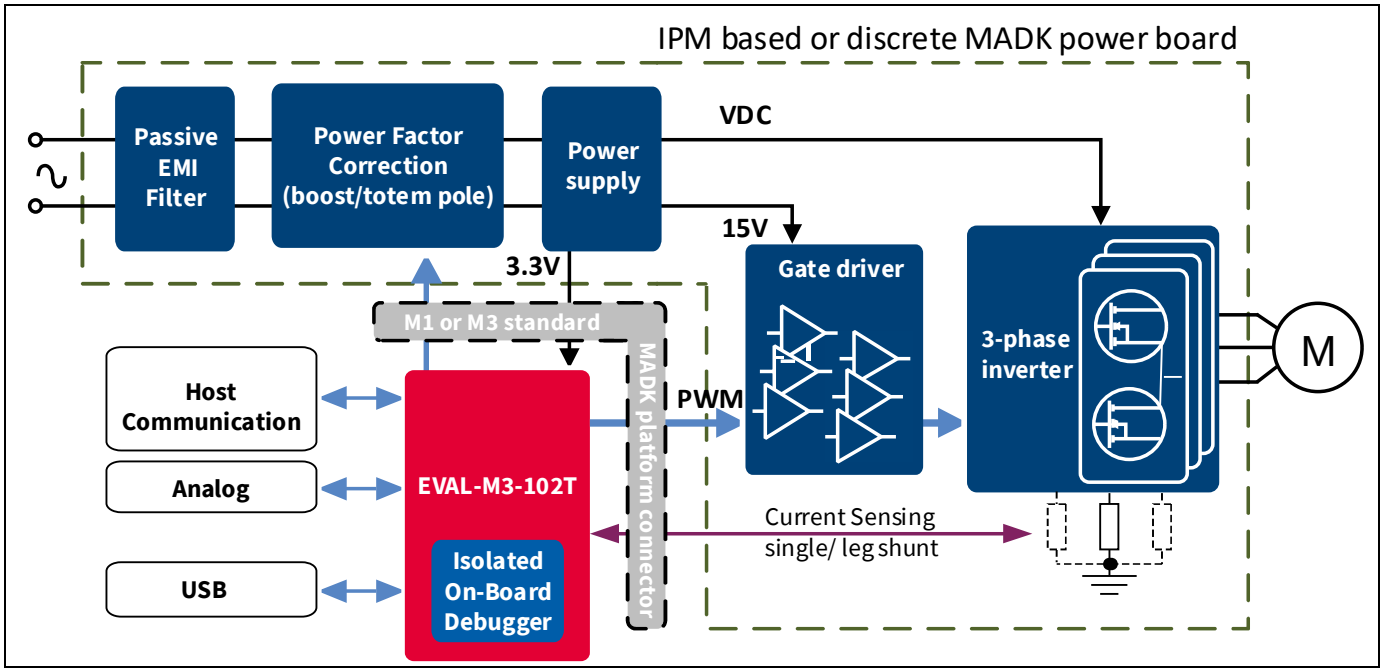

Figure 2 Typical Application Block Diagram Using IMC102T-F064

3.2 IMC102T-F064 pinout description

The main part of the EVAL-M3-102T MADK control board is the IMC102T-F064 iMOTION™ motor control IC. Figure 3 depicts the pinout of the IMC102T-F064 IC. IMC102T-F064 comes in a 12mm x 12mm 64-pin LQFP package.

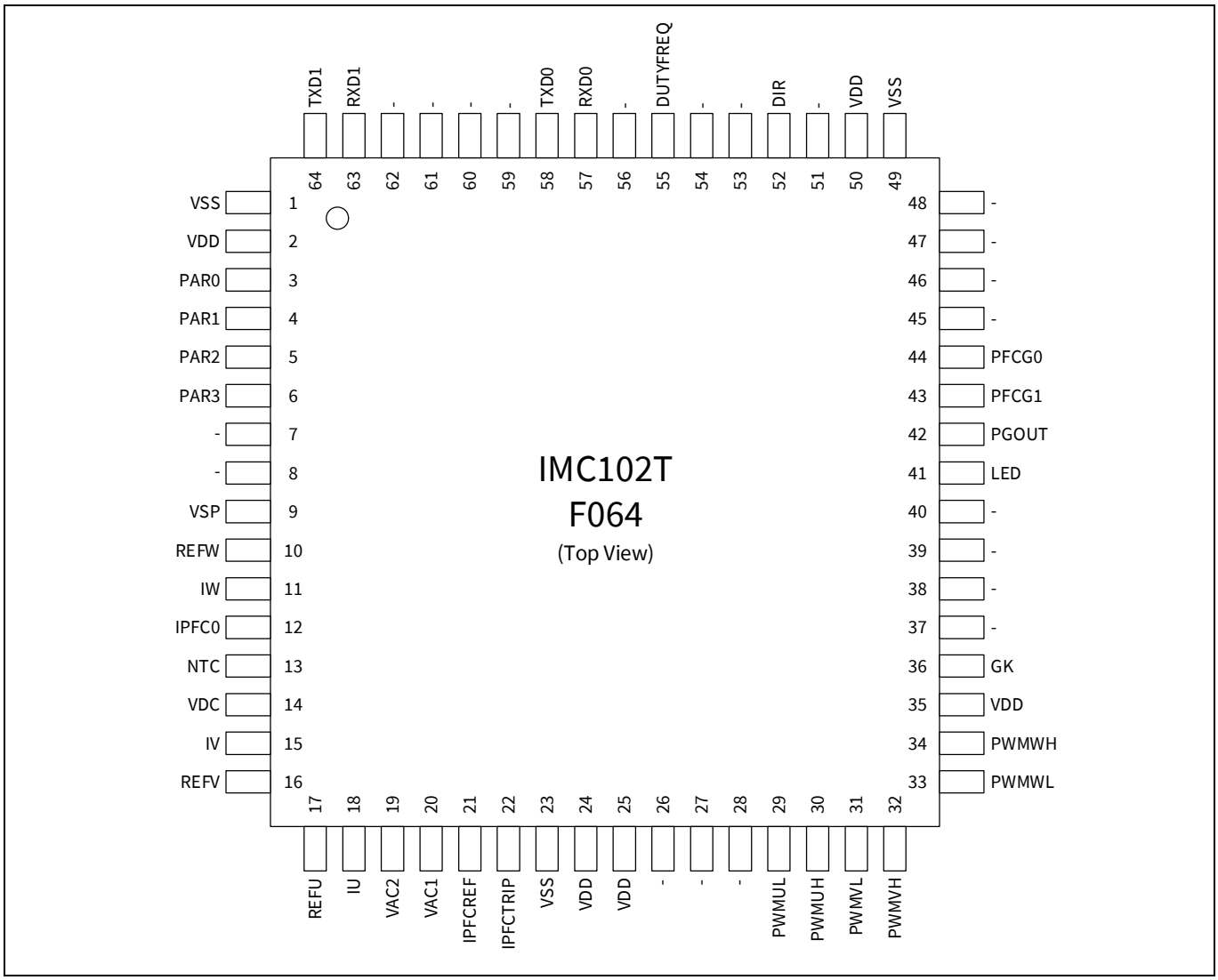

Figure 3 Pinout of IMC102T-F064

The pin type is specified as follows:

- I — digital input
- O — digital output
- AIN — analog input
- “-” — do not have any signal assigned

Note: Pins that do not have any signal assigned are reserved for future use. These pins should be left unconnected and neither be connected to ground nor to the positive supply.

Table 2 lists the available pins of IMC102T-F064 with short descriptions. For more detailed information, please refer to the datasheet or User Manual for iMOTION™ IMC102T-F064 motor control IC.

Table 2 IMC102T-F064 pinout description

Pin#	Type	Pin Name	Description
1	Power	VSS	ground
2	Power	VDD	VDD supply power
3	I	PAR0	Parameter page select bit 0
4	I	PAR1	Parameter page select bit 1
5	I	PAR2	Parameter page select bit 2
6	I	PAR3	Parameter page select bit 3
7	-	-	Not used
8	-	-	Not used
9	AIN	VSP	Analog speed reference input
10	AIN	REFW	Itrip phase W reference
11	AIN	IW	Phase W current leg sensing
12	AIN	IPFC0	PFC current sensing
13	AIN	NTC	external temp sense input
14	AIN	VDC	DC bus sensing input
15	AIN	IV	Phase V current leg sensing
16	AIN	REFV	Itrip phase V reference
17	AIN	REFU	Itrip phase U reference
18	AIN	IU	Phase U leg sensing or single shunt current sensing
19	AIN	VAC2	VAC sense input line2
20	AIN	VAC1	VAC sense input line1
21	AIN	IPFCREF	Itrip PFC reference input
22	AIN	IPFCTRIP	Itrip PFC input
23	Power	VSS	ground
24	Power	VDD	VDD supply power
25	Power	VDD	VDD supply power
26	-	-	Not used
27	-	-	Not used
28	-	-	Not used
29	O	PWMUL	motor PWM phase U low side
30	O	PWMUH	motor PWM phase U high side
31	O	PWMVL	motor PWM phase V low side
32	O	PWMVH	motor PWM phase V high side
33	O	PWMWL	motor PWM phase W low side
34	O	PWMWH	motor PWM phase W high side
35	Power	VDD	VDD supply power

36	I	GK	Motor gate kill input
37	-	-	Not used
38	-	-	Not used
39	-	-	Not used
40	-	-	Not used
41	O	LED	Status LED
42	O	PGOUT	Pulse output
43	O	PFCG1	PFC gate driver1
44	O	PFCG0	PFC gate driver0
45	-	-	Not used
46	-	-	Not used
47	-	-	Not used
48	-	-	Not used
49	Power	VSS	ground
50	Power	VDD	VDD supply power
51	-	-	Not used
52	I	DIR	Direction input
53	-	-	Not used
54	-	-	Not used
55	I	DUTYFREQ	Duty/Freq input for speed input
56	-	-	Not used
57	I	RXD0	UART0 Receive for SW download
58	O	TXD0	UART0 Transmit for SW download
59	-	-	Not used
60	-	-	Not used
61	-	-	Not used
62	-	-	Not used
63	I	RXD1	UART1 Receive for host interface
64	O	TXD1	UART1 Transmit for host interface

3.3 EVAL-M3-102T board specifications

Table 3 depicts the important specifications of the evaluation board EVAL-M3-102T.

Table 3 EVAL-M3-102T board specifications

Parameters	Values	Conditions / comments
Host Interface (Not isolated)		
UART(TXD1, RXD1)	0 - VDD	Serial port 1 typical 57600 Bps
AIN	0 - VDD	analog input

Parameters	Values	Conditions / comments
DIN	0 - VDD	digital input
DOUT	0 - VDD	digital output
FG	0 - 30V	digital output with open drain structure
Input		
VDD	3.3V (default), 5V	Controller supply voltage
DC Bus		
DC Bus Scaling	8.20 counts/V	13.3kΩ resistor on control board, and 2MΩ resistor on power board
DC Bus sensing range	499.54V max	
Current feedback		
Motor Internal Current Feedback Amplifier Gain	1, 3, 6, 12	Configured by MCEWizard
Motor Current sensing device	0 – VDD/Gain	Single shunt resistor Leg shunt resistor
Motor Current Op-amp Configuration	Non-Inverting	default setting
Motor Current External Amplification Gain	0.833	
PFC Current sensing device	0 – VDD/Gain	
PFC Current Op-amp Configuration	Non-Inverting	default setting
PFC Current External Amplification Gain	0.923	
Resolution	12-bit	PCB design may reduce the resolution
Latency	1 pwm cycle	
Protections		
NTC Temperature shutdown value	0 - VDD (configured by MCEWizard)	
PCB characteristics		
Material	FR4, 1.6MM thickness Copper thickness = 1oz (35um)	
Dimension	65mmx45mm	
System environment		
Ambient temperature	-40 - 105°C	

3.4 Pin assignment

Essential information about the connections of the EVAL-M3-102T evaluation board is described below.

Table 4 provides the pin assignments of the iMOTION™ MADK-M3 30 pins interface connector J1. This connector is the interface to the power board.

Table 4 J1- iMOTION™ MADK-M3 30 pins interface connector for control board

Pin Nr.	Pin	Details
1	PWMUH	3.3 V compatible logic output for high side gate driver-Phase U
2	GND	Ground
3	PWMUL	3.3 V compatible logic output for low side gate driver-Phase U
4	GND	Ground
5	PWMVH	3.3 V compatible logic output for high side gate driver-Phase V
6	+3.3V	On board 3.3 V supply
7	PWMVL	3.3 V compatible logic output for low side gate driver-Phase V
8	+3.3V	On board 3.3 V supply
9	PWMWH	3.3 V compatible logic output for high side gate driver-Phase W
10	IU+	Shunt voltage phase U
11	PWMWL	3.3 V compatible logic output for low side gate driver-Phase W
12	IU-	Ground
13	GK	Gate kill signal – active low when over current is detected
14	DCBSENSE	DC bus positive voltage, scaled in 0-3.3 V range by a voltage divider
15	VTH	Thermistor input
16	IV+	Shunt voltage phase V
17	IV-	Ground
18	IW+	Shunt voltage phase W
19	IW-	Ground
20	VCC	Defined for 15 V Power Supply (not used in this board)
21	PFCG0	3.3 V compatible logic output for PFC gate driver0
22	GND	Ground
23	PFCG1	3.3 V compatible logic output for PFC gate driver1
24	+3.3V	On board 3.3 V supply
25	-	Not used
26	DCBSENSE	DC bus positive voltage, scaled in 0-3.3 V range by a voltage divider
27	VAC+	AC Voltage input1 with high resistive input
28	VAC-	AC Voltage input2 with high resistive input
29	-	Not used
30	IPFC-	Shunt voltage for PFC

Table 5 includes the detail of UART connectors.

Table 5 J2- UART Connector

Pin	Name	Pin Name Connectors
1	TXD0	Serial port 0 Output, IMC102T-T064 transmit data to master controller

Pin	Name	Pin Name Connectors
2	RXD0	Serial port 0 Input, IMC102T-T064 receive data from master controller
3	+3.3V	+3.3V power supply
4	GND	Ground
5	GND	Ground
6	+3.3V	+3.3V power supply
7	TXD1	Serial port 1 Input, IMC102T-T064 transmit data to master controller
8	RXD1	Serial port 1 Output, IMC102T-T064 receive data from master controller

Table 6, Table 7, Table 8, Table 9, Table 10, Table 11 and Table 12 include the details of test signal pin connectors.

Table 6 Digital signal test pins J3

Pin	Name	Pin Name Connectors
1	-	Not used
2	PAR3	Parameter page select bit 3
3	-	Not used
4	PAR1	Parameter page select bit 1
5	PAR2	Parameter page select bit 2
6	PAR0	Parameter page select bit 0

Table 7 Digital signal test pins J4

Pin	Name	Pin Name Connector
1	-	Not used
2	-	Not used
3	-	Not used
4	-	Not used

Table 8 Digital signal test pins J5

Pin	Name	Pin Name Connector
1	-	Not used
2	-	Not used
3	-	Not used
4	-	Not used

Table 9 Digital signal test pins J6

Pin	Name	Pin Name Connector
1	-	Not used
2	-	Not used
3	DIR	Direction input
4	-	Not used

Table 10 VSP signal test pins J7

Pin	Name	Pin Name Connector
1	+3.3V	+3.3V power supply
2	VSP	Analog speed reference input
3	GND	Ground

Table 11 Digital signal test pins J8

Pin	Name	Pin Name Connector
1	PGOUT	PG (Pulse Generation) output
2	DUTYFREQ	Duty/Frequency input for speed input

Table 12 FG signal test pin J9

Pin	Name	Pin Name Connector
1	FG	open drain output for speed as shown in Figure 30

4 Getting Started with EVAL-M3-102T

In order to run the motor system, a combination of the iMOTION™ MADK control board (EVAL-M3-102T) and the matching MADK power board (with M3 connector) is required. The iMOTION™ Software Tools MCEDesigner and MCEWizard are also required in order to initialy setup the system, as well as to control and fine-tune the system performance to match users exact needs. This chapter provides more details on setting up the system and getting started with iMOTION™ MADK development platform.

4.1 Setting up the system

EVAL-M3-102T consists of several functional groups which enable out-of-the-box, fully functional motor control system combined with additional interfaces and test points for more advanced use cases. Figure 4 shows the functional groups of the EVAL-M3-102T evaluation board.

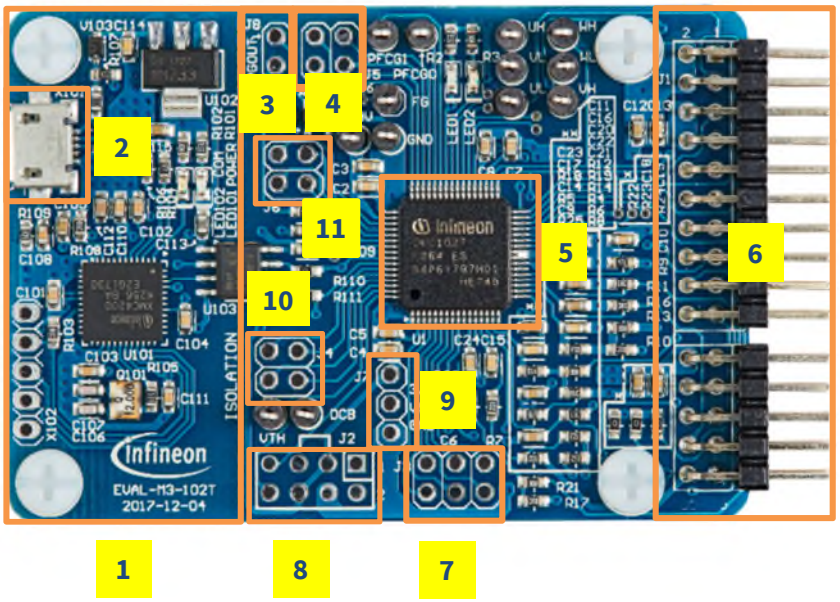

1. On-board debugger
2. USB Connecter (X101)
3. Test Signal Pin Connecter (J8)
4. Test Signal Pin Connecter (J5)
5. IMC102T-F064 iMOTION™ motor control IC
6. iMOTION™ MADK-M3 30 pins interface connector (J1)
7. Test Signal Pin Connecter (J3)
8. iMOTION™ Link connector (J2)
9. VSP Signal Pin Connecter (J7)
10. Test Signal Pin Connecter (J4)
11. Test Signal Pin Connecter (J6)

Figure 4 Functional groups of the EVAL-M3-102T evaluation board's top side

After downloading and installing the iMOTION™ PC Tools (MCEWizard and MCEDesigner), following steps needs to be executed in order to run the motor. Refer to chapters 0 and 4.2.2 as well as MCEWizard and MCEDesigner documentation for more information.

1. Get the latest "IMC102T-F064 MCE Software Package" available on www.infineon.com/imotion-software web page.
2. Connect PC-USB connector on the on-board-debugger to the PC via USB cable.
3. Connect EVAL-M3-102T's M3 30-pin interface connector (J1) to power board (For example EVAL-M3-CM615PN, see Figure 5).
4. Use MCEWizard to enter the target motor's system and operating parameters, as well as evaluation board's hardware parameters, which will then be used to calculate controller's digital parameter set representing complete motor drive system. First click "Calculate" button on the "Verify & Save Page" and then save the

drive parameter set into your project directory by clicking “Export to Designer file (.txt)”. Saved Drive System Parameter File will be later used by the MCEDesigner. Refer to Chapter 4.2.1 or MCEWizard User Guide for more details.

5. Connect motor phase outputs to the motor.
6. Connect AC power to power input connector and power on system.
7. Start MCEDesigner tool and open MCEDesigner default configuration file (.irc) for IMC102T-F064 controller (IMC102T_Vxxx.irc) by clicking “File” > “Open”. IMC102T_Vxxx.irc file is included in ”IMC102T-F064 MCE Software Package” downloaded in step 1.
8. MCEDesigner should automatically connect to the EVAL-M3-102T control board using default COM port (Indicated by green circle next to “COMx Up” status in the bottom frame of the MCEDesigner GUI). If it cannot establish the connection, change COM port by doing following steps: (“System” window active) > Preferences > Connection > Connect using (Chose one of the other available COM ports from the drop-down menu).
9. In case the IMC102T-F064 IC on the EVAL-M3-102T is empty (not programmed), which will be indicated by the pop-up window message after connecting to the MCEDesigner, then use following steps to program the firmware and the system parameters into the internal SRAM of iMOTION™ IC: Click “Tools” > “Programmer” and select “Program Firmware and Parameters”. Browse and select the IMC102T-F064_A_Vxxx.ldf file which was included in the IMC102T-F064 MCE Software Package” downloaded in step 1. Then browse and select the System Drive Parameters .txt file created in step 4. See chapter MCEDesigner setup overview 4.2.2 for more details.
10. In case the IMC102T-F064 IC firmware has already been loaded, use following steps to program the system parameters into the internal SRAM of iMOTION™ IC: Click “Tools” > “Programmer” and select “Program Parameters”. Browse and select the System Drive Parameters .txt file created in step 4. See chapter MCEDesigner setup overview 4.2.2 for more details.
11. Start the motor by clicking the green traffic light button in the control bar.

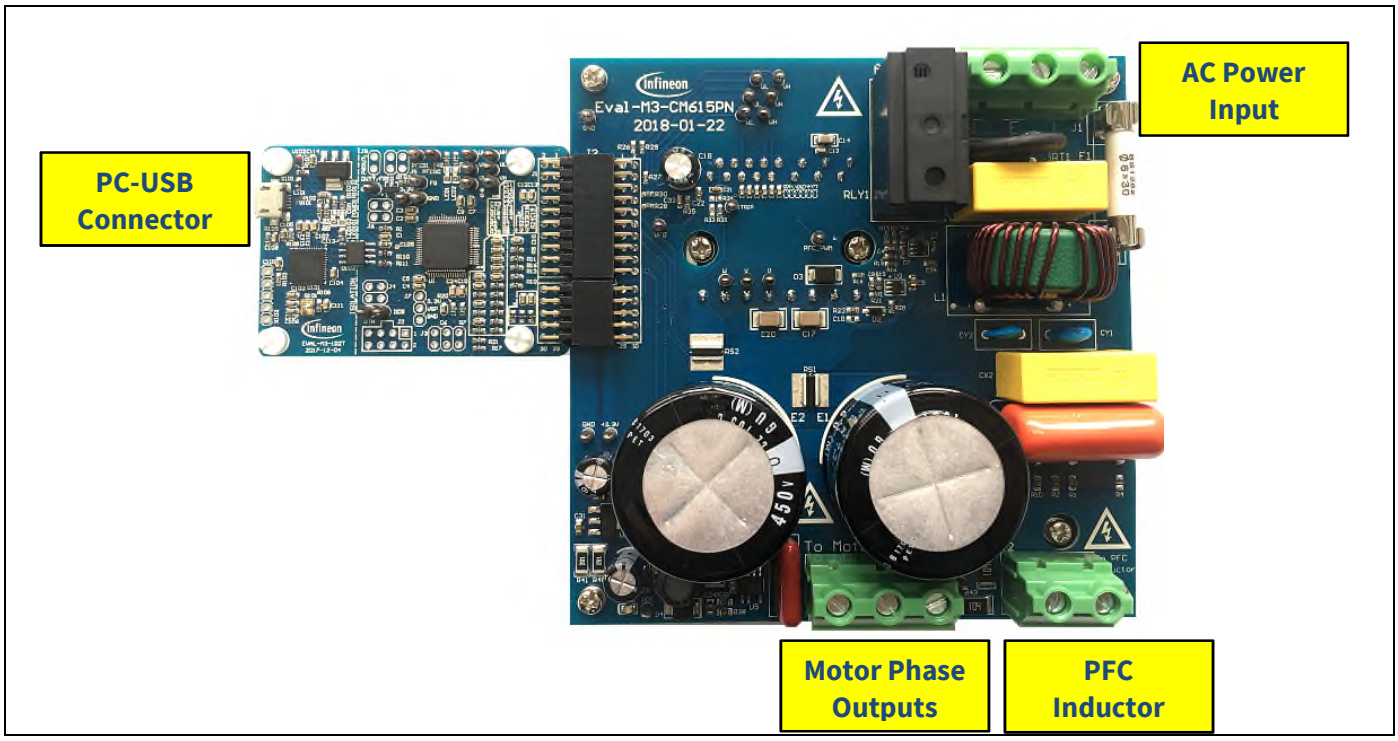

Figure 5 System connection example using EVAL-M3-102T and EVAL-M3-CM615PN

4.2 iMOTION™ development tools and software

The iMOTION™ Development Tool installers for MCEDesigner and MCEWizard are available for download via Infineon iMOTION™ website (http://www.infineon.com/imotion-software). All supported tools and software variants are listed there. Please visit this page periodically to check for tool/software updates.

Isolated on-board debugger provides the USB to UART bridge between the PC and the target iMOTION™ device with 1kV DC galvanic isolation between the motor drive system (hot side) and the PC/debugger (cold) side. On-board debugger uses the SEGGER J-Link driver for UART communication with IMC102T-F064. J-Link driver will be installed during the MCEDesigner installation. In case the driver is not installed properly, please go to SEGGER J-Link website to download and install the latest J-Link "Software and Documentation pack for Windows".

4.2.1 MCEWizard setup overview

After installing the MCEWizard, the shortcut for MCEWizard appears on the Windows desktop. Double click the shortcut to open the MCEWizard and configure the parameters for evaluation boards or motor. Figure 6 shows the "Welcome Page" for MCEWizard, where the MADK control board or power board can be selected through the pull-down list. Infineon keeps releasing new MADK controller and power boards. Therefore, it could happen that some of the newest power boards are not pre-configured in the MCEWizard tool and cannot be selected through the pull-down menu. In that case, the user should select any other power board (as similar as possible) and follow the MCEWizard setup steps by entering the parameter values which are specific to the chosen board. Make sure both "I have modified the circuit board" and "Enable advanced question" checkmarks are selected. Please refer to the User Manual of the corresponding power board for additional information.

After selecting the MADK control and the power board, start the MCEWizard system setup procedure by clicking the "Next" button in the right bottom corner as shown in Figure 6.

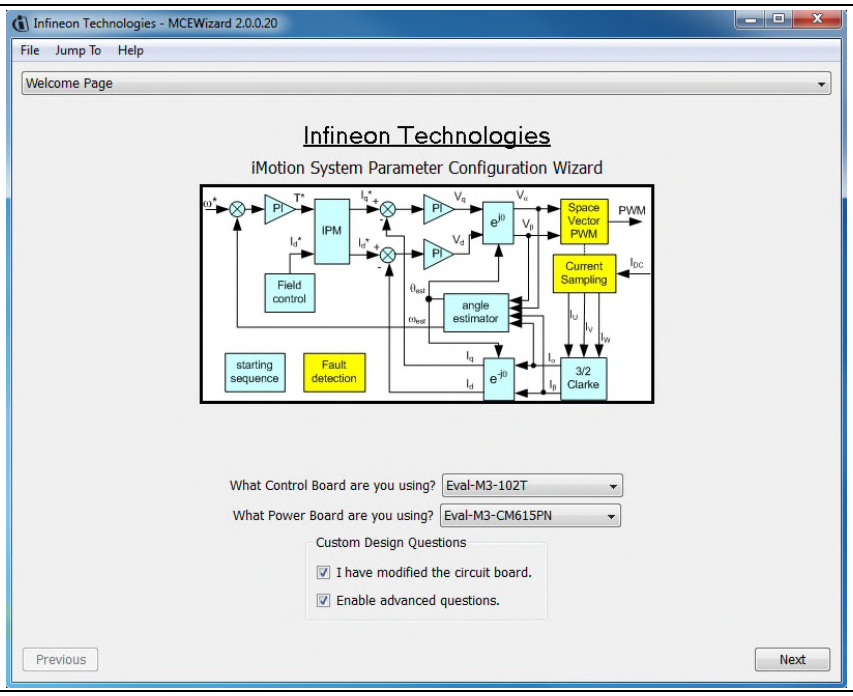

Figure 6 Welcome Page of MCEWizard

iMOTION™ MADK system enables users to easily test different combination of control and power board with their motors. User should be familiar with the system level parameters which are related to the motor used. There is a very limited number of parameters which are specific to the control board or power board hardware. Table 13 provides the MCEWizard setup overview for hardware related parameters. Similar tables will be available in each power board's User Manual. Combination of this table and the corresponding table of the power board provides enough information to setup the MADK-based motor drive system in shortest time.

Table 13 MCEWizard setup overview table

Page	Parameter	Value	Comment
Welcome Page	Power Board selecting	MADK power board name	If no, select similar power board to modify
Options Page	Motor 1 Shunt Configuration	Refer to the power board App Note	
Question 3	Controller Supply Voltage	Refer to the power board App Note	VDD is 3.3V by default
Question 19	Max DC Bus Voltage	Refer to the power board App Note	
Question 23	DC Bus Sensing High Resistor	Refer to the power board App Note	
Question 24	DC Bus Sensing Low Resistor	13.3 kOhm	
Question 54	NTC Temperature Shutdown value	Calculated as the Section 5.3.2	Refer to the power board App Note
Question 63	GateSense Low-Side Devices	Refer to the power board App Note	High is true by default
Question 64	GateSense High-Side Devices	Refer to the power board App Note	High is true by default
Question 69	Motor 1 Current Input	Calculated as the Section 5.1.2	
Question 83	PFC Topology	Refer to the power board App Note	Boost or Totem-Pole
Question 85	PFC Current Input	Calculated as the Section 5.2.2	
Question 92	PFC Gate Driver Polarity High Side	Refer to the power board App Note	High is true by default
Question 93	PFC Gate Driver Polarity Low Side	Refer to the power board App Note	High is true by default

After all the MCEWizard questions are answered, the “Verify & Save Page” will be shown as in Figure 7.

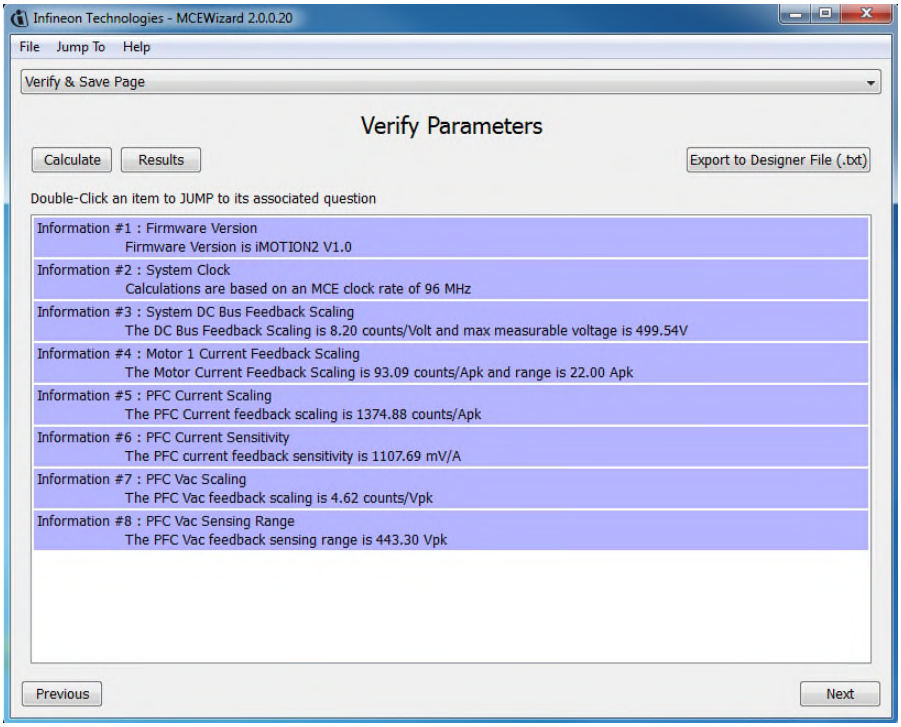

Figure 7 Verify and Save page for MCEWizard

Click “Calculate” button and “Export to Designer File (.txt)” button to save the parameter file which will be used by the MCEDesigner in the next steps.

4.2.2 MCEDesigner setup overview

After installing MCEDesigner installer, there is a shortcut for MCEDesigner on Windows desktop. Double click on the shortcut to open MCEDesigner and then open “IMC102T_xx.irc” file (which was included in the “IMC102T-F064 MCE Software Package” installed earlier, as instructed in Chapter 4.1) shown in Figure 8.

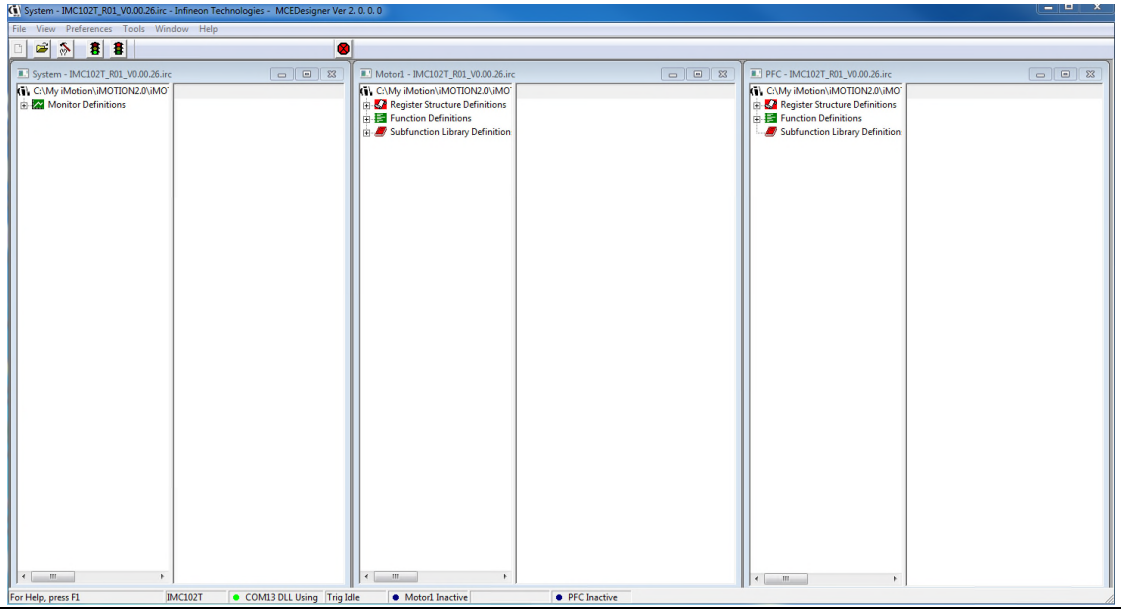

Figure 8 MCEDesigner’s Main Display for EVAL-M3-102T

MCEDesigner programmer function can be used to program IMC101T-T038 firmware and/or System parameters. To call this function, click on “Tools” menu and then select “Programmer” in the pull down list. The pop-up window “Program IMC controller” will show up as in Figure 9.

To program both firmware and Drive System Parameters into IMC102T-F064 (which can happen when programming for the first time the brand new devices with default factory setting, or when the new version of iMOTION™ firmware is being downloaded), first click on the “Program Firmware and Parameter” radio button in the “Program IMC controller” pop-up window. After that, select the Drive System Parameter file created using MCEWizard by clicking on the “Browse…” button at the end of the “Program Parameter File” row, and then also select the the IMC102T-F064_A_Vxxx.ldf file (which was included in the “IMC102T-F064 MCE Software Package”) by clicking on the “Browse…” button at the end of “Program Firmware File” row. Finally, click on the “Start” button to program the parameter file into the IMC102T-F064 IC.

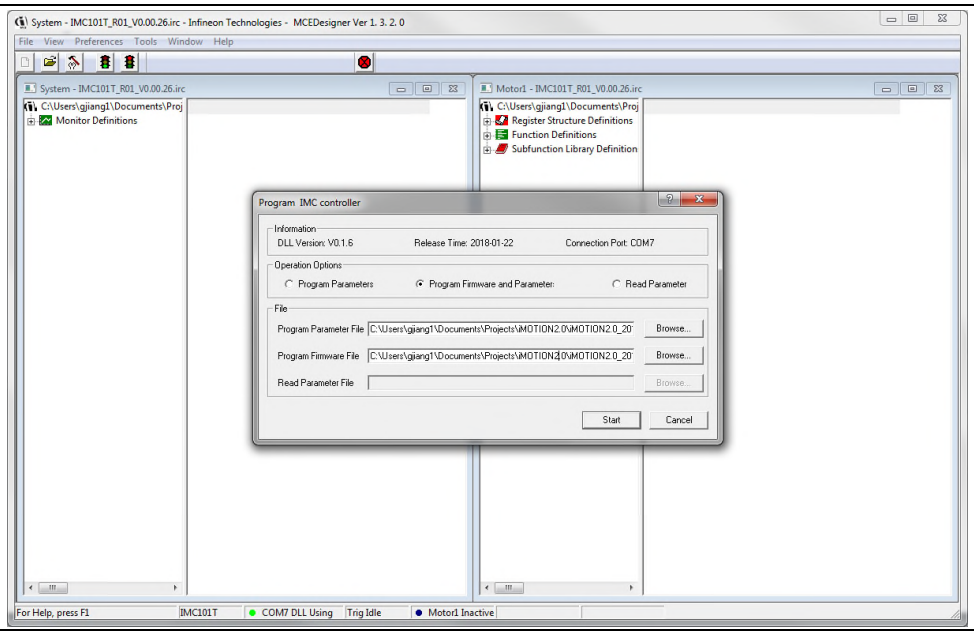

Figure 9 Program Firmware and Parameter in “Program IMC Controller” pop-up window

To program only Drive System Parameter file into IMC102T-F064, click on “Tools” menu and select “Programmer” in the pull down list. The pop-up window “Program IMC controller” will show up as in Figure 10. Click on the “Program Parameters” radio button (this is the default option), and then select the Drive System Parameter file created using MCEWizard by clicking on “Browse…”. Finally, click on the “Start” button to program the parameter file into the IMC102T-F064 IC.

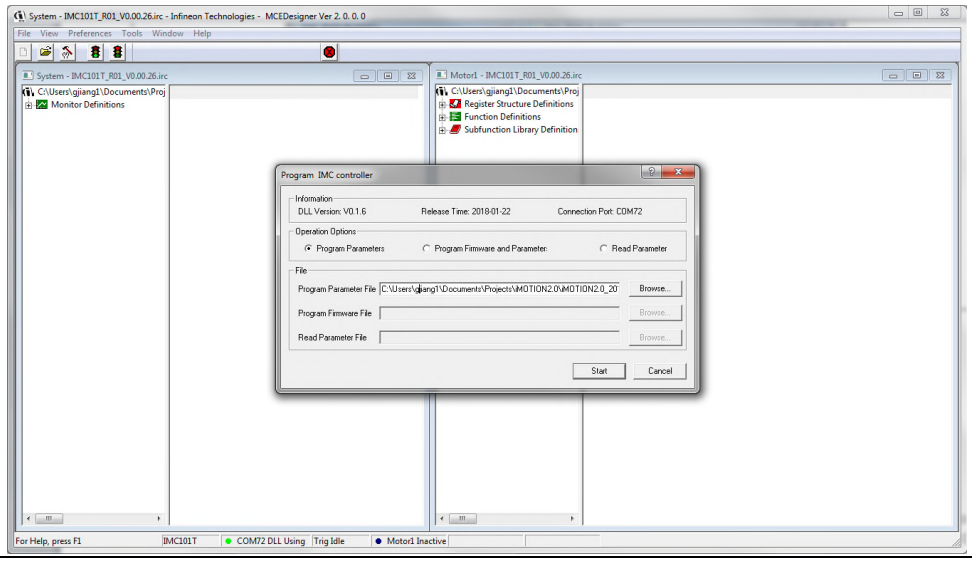

Figure 10 "Program IMC Controller" pop-up window

After Drive System Parameter file has been programmed into IMC102 controller, and the motor drive system is powered, the MCEDesigner can be used to start/stop the motor, display motor current traces, change the motor speed, modify drive parameters and many other functions. Please refer to the MCEDesigner documentation for more details.

Note: On-board Debugger portion of EVAL-M3-102T is galvanically isolated from the controller portion and the attached power board. In order to program the parameters or firmware to the IMC102T-F064 controller, the 3.3V DC voltage needs to be supplied to the controller portion of the EVAL-M3-102T. This voltage can either be supplied by the power board (MADK power boards are designed to supply the 3.3V to the control board through M1 or M3 connector) or by feeding the 3.3V DC voltage to the control board through some of the available 3.3V access/test points if the power board is not attached to the EVAL-M3-102T control board.

All latest firmware file for different type of iMOTION™ control ICs are available for download via Infineon iMOTION™ website (http://www.infineon.com/imotion-software).

5 Hardware description of EVAL-M3-102T

This chapter covers hardware design of the EVAL-M3-102T in more details. To enable users to make the EVAL-M3-102T evaluation board a basis for a new development or modification of their own systems, all necessary technical data like schematics, layout and components are also included in this chapter.

5.1 Motor Current feedback circuitry

5.1.1 Motor Shunt configuration

Both single shunt and leg shunt topologies are supported by the EVAL-M3-102T control board. The user needs to make sure that the shunt configuration matches with power board hardware configuration. Please refer to the power board User Manual for details. The shunt configuration can be changed in MCEWizard by clicking and selecting in the pull down list marked with red box as shown in Figure 11.

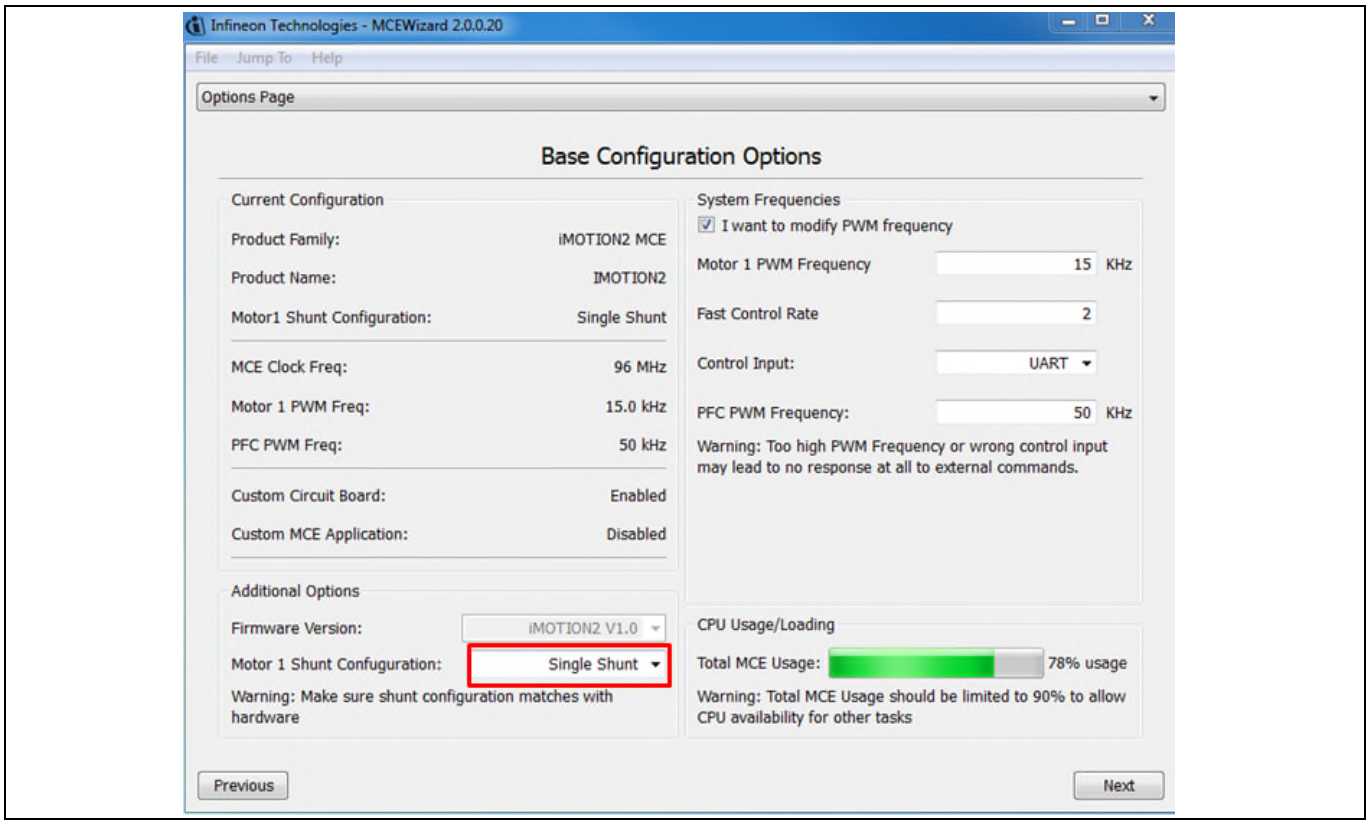

Figure 11 Shunt Configuration

5.1.2 Motor External Current feedback configuration and calculation

The shunt resistance R_{sh} value can be found in the schematics or User Manual for the power board (For example, the leg shunt resistors are 30mΩ for EVAL-M3-CM615PN and 100mΩ for EVAL-M3-TS6-606).

The current input value is product of the shunt resistance in milliohms and gain of External current sense amplifier as shown in Figure 12.

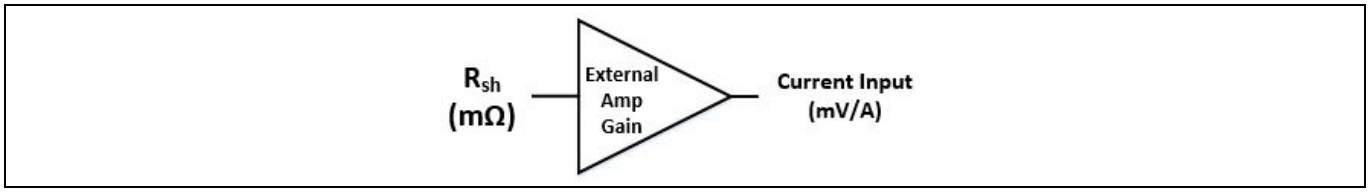

Figure 12 Current shunt feedback and sample timing

Figure 13 depicts IU+ current feedback sensing circuity on EVAL-M3-102T evaluation board. Please note that the default external amplification gain is less than 1 for current sense in this evaluation board.

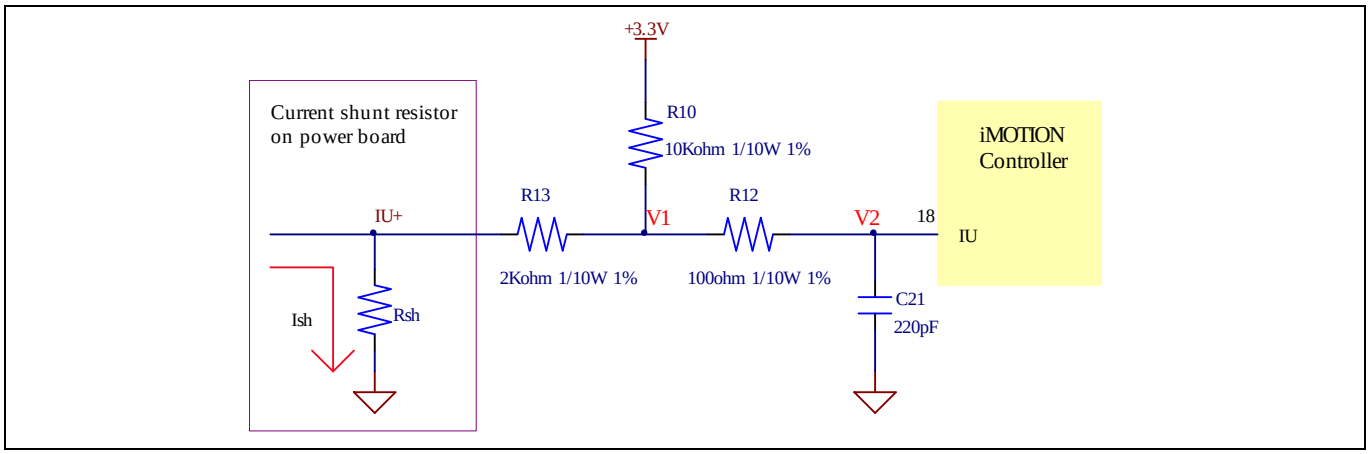

Figure 13 The part of Current feedback on the EVAL-M3-102T evaluation board

Based on the principle of Kirchhoff's voltage law,

$$V_2 \approx V_1 \approx (V_{DD} - I_{sh} * R_{sh}) * \frac{R_{13}}{R_{10}+R_{13}} + I_{sh} * R_{sh} = \frac{R_{13}}{R_{10}+R_{13}} V_{DD} + \frac{R_{10}}{R_{10}+R_{13}} R_{sh} * I_{sh}$$

$$Current\ input = \frac{R_{10}}{R_{10}+R_{13}} R_{sh} = \frac{5}{6} R_{sh}$$

Based on this calculation, the current input for the MADK combination of EVAL-M3-102T and EVAL-M3-CM615PN is 25 mV/A, and for the combination of EVAL-M3-102T and EVAL-M3-TS6-606 it is 83.3 mV/A. Please use same procedure to calculate the current input for other combinations of MADK boards and enter it into MCEWizard.

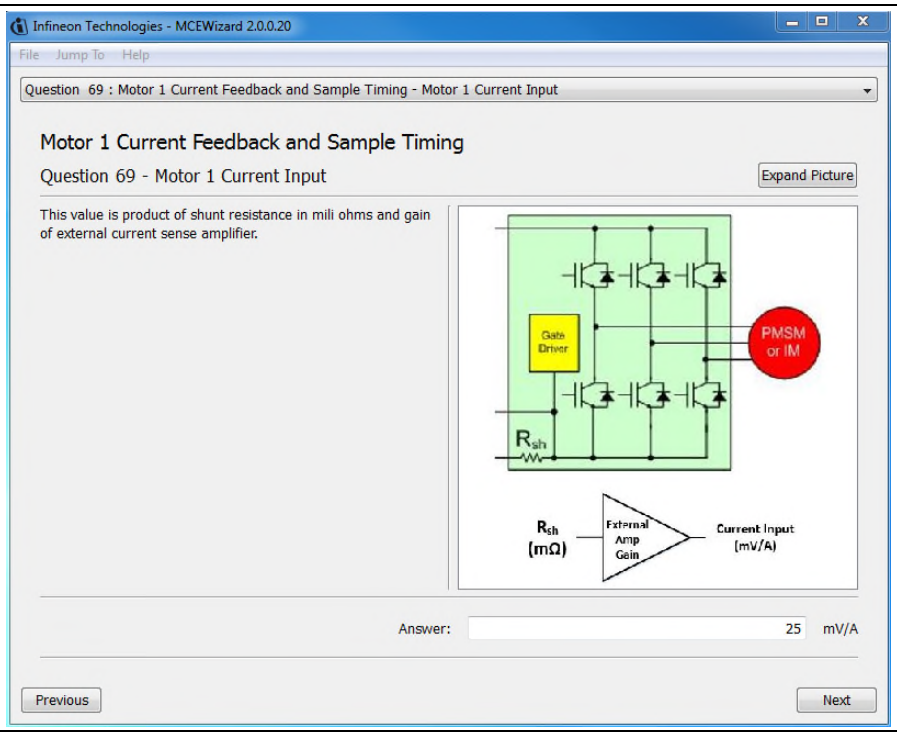

Figure 14 Current feedback configuration in MCEWizard for EVAL-M3-102T and EVAL-M3-CM615PN

5.1.3 Motor Internal Current feedback amplifier gain configuration

The iMOTION™ controller on this board has the internal current feedback programmable gain amplifier which has four gain settings: 1x, 3x, 6x and 12x.

The internal Current feedback amplifier gain can be configured in MCEWizard as shown in Figure 15.

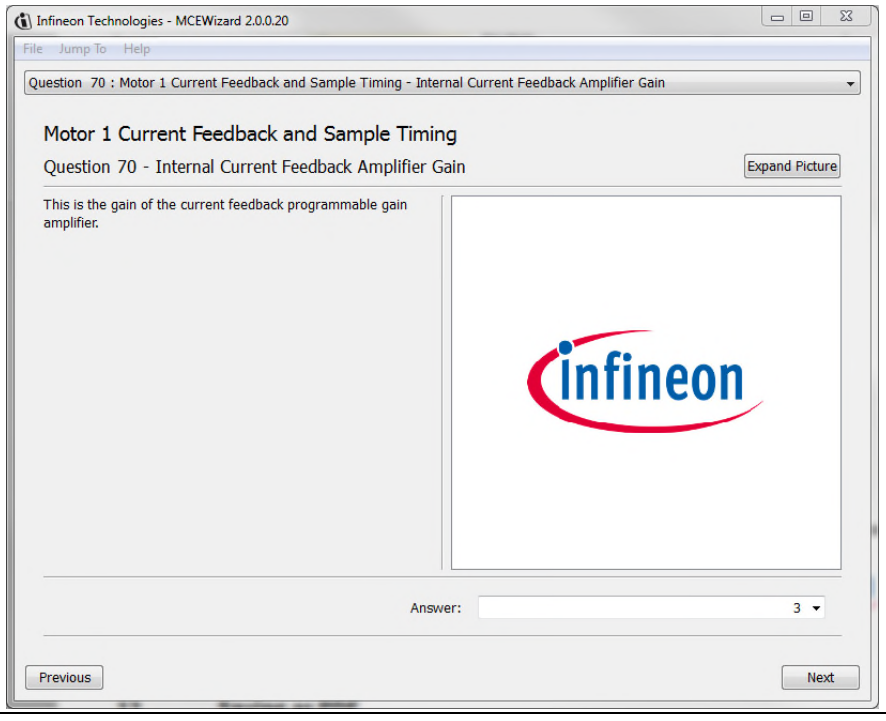

Figure 15 Internal current feedback amplifier gain configuration

5.2 PFC Hardware configuration

5.2.1 PFC Topology selection

The EVAL-M3-102T control board applies to both of PFC algorithms, boost mode and totem pole. The user needs to make sure that the topology configuration matches with power board hardware configuration. The topology configuration can be changed in MCEWizard by clicking and selecting in the pull down list marked with red box as shown in Figure 16.

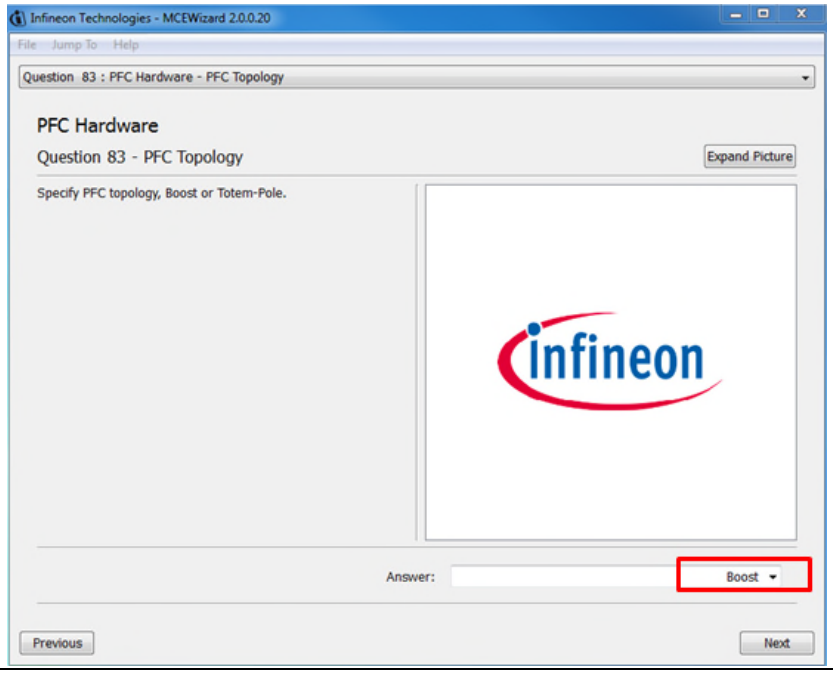

Figure 16 The PFC topology choose in MCEWizard for EVAL-M3-102T and EVAL-M3-CM615PN

5.2.2 PFC External Current feedback configuration and calculation

Please refer to the schematic diagram of power board for the shunt resistance value (For example, the shunt resistors are 30mΩ for EVAL-M3-CM615PN and 100mΩ for EVAL-M3-TS6-606).

The current input value is product of the shunt resistance in milliohms and gain of External current sense amplifier as shown in Figure 17.

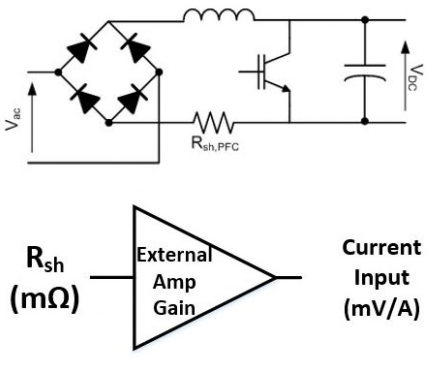

Figure 17 PFC Current shunt feedback and sample timing

5.2.3 PFC Internal Current feedback amplifier gain configuration

Figure 18 depicts IPFC- current feedback sensing circuity on EVAL-M3-102T evaluation board. Please note that the default external amplification gain is less than 1 for current sense in this evaluation board.

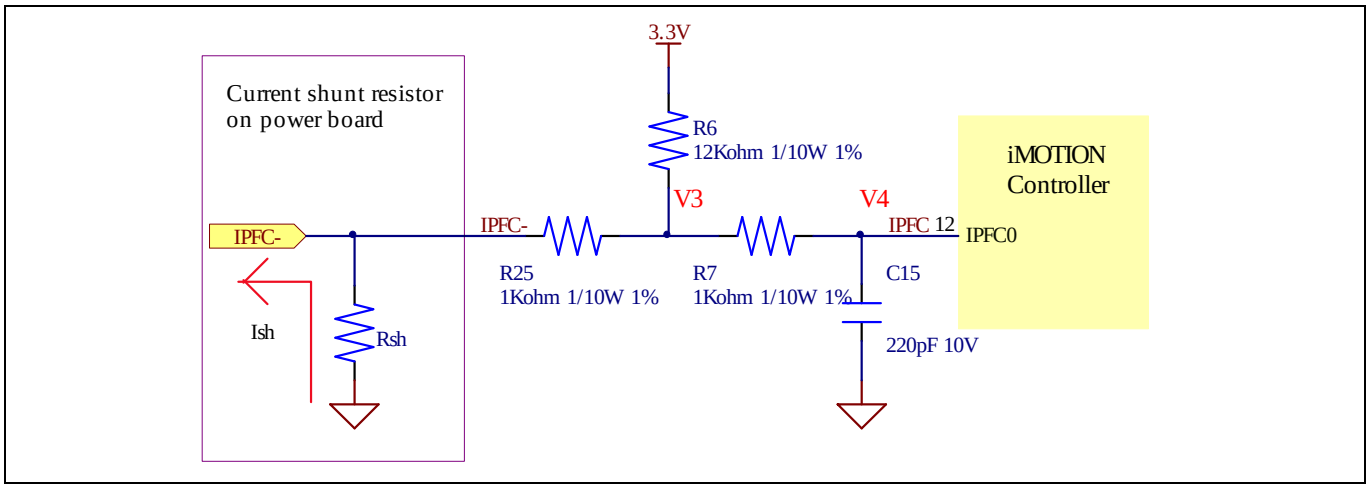

Figure 18 The PFC Current feedback circuit for EVAL-M3-102T evaluation board

Based on the principle of Kirchhoff's voltage law,

$$V_4 \approx V_3 \approx (V_{DD} + I_{sh} * R_{sh}) * \frac{R_{25}}{R_6 + R_{25}} - I_{sh} * R_{sh} = \frac{R_{25}}{R_6 + R_{25}} V_{DD} - \frac{R_6}{R_6 + R_{25}} R_{sh} * I_{sh}$$

$$Current\ input = \frac{R_6}{R_6 + R_{25}} R_{sh} = \frac{12}{13} R_{sh}$$

Based on this calculation, the current input for the MADK combination of EVAL-M3-102T and EVAL-M3-CM615PN is 27.69 mV/A, and for the combination of EVAL-M3-102T and EVAL-M3-TS6-606 it is 92.31 mV/A. Please use same procedure to calculate the current input for other combinations of MADK boards and enter it into MCEWizard.

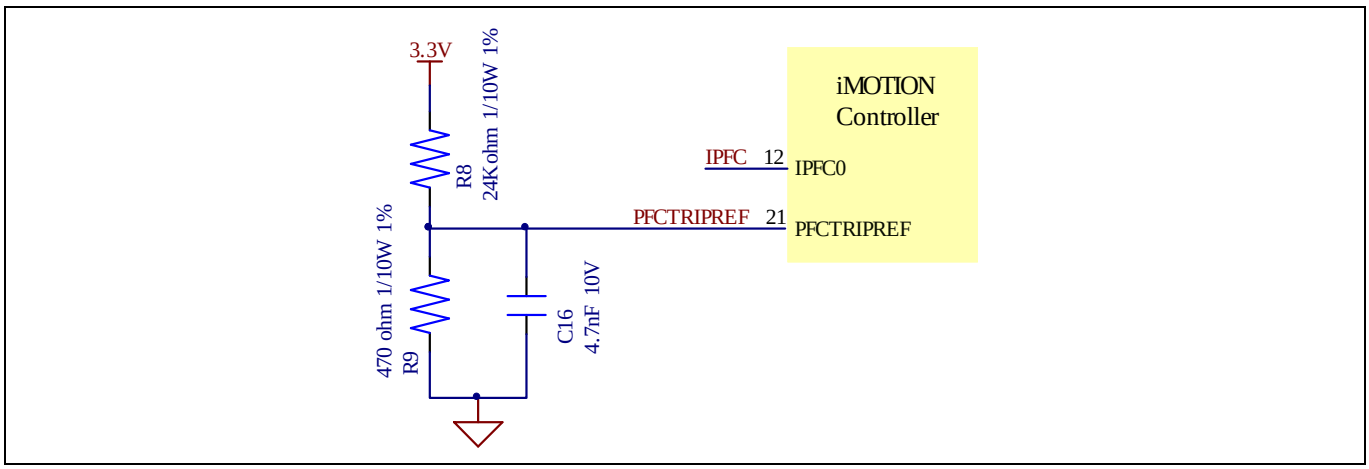

Figure 19 The PFCTRIPREF Circuit on the EVAL-M3-102T evaluation board

The PFC's overcurrent protection circuit is shown in Figure 18 and Figure 19. The $I_{PFCTRIP_Peak}$ equal to 6.347A for EVAL-M3-102T and EVAL-M3-CM615PN evaluation board only.

The calculation formula is as follows,

$$I_{PFCTRIP_{Peak}} = -\frac{\left(\frac{R_9}{R_8+R_9} - \frac{R_6}{R_6+R_{25}}\right)V_{DD}}{R_{sh}}$$

5.2.4 AC Voltage sensing configuration

Figure 20 shows the schematic of EVAL-M3-102T evaluation board with VAC sense.

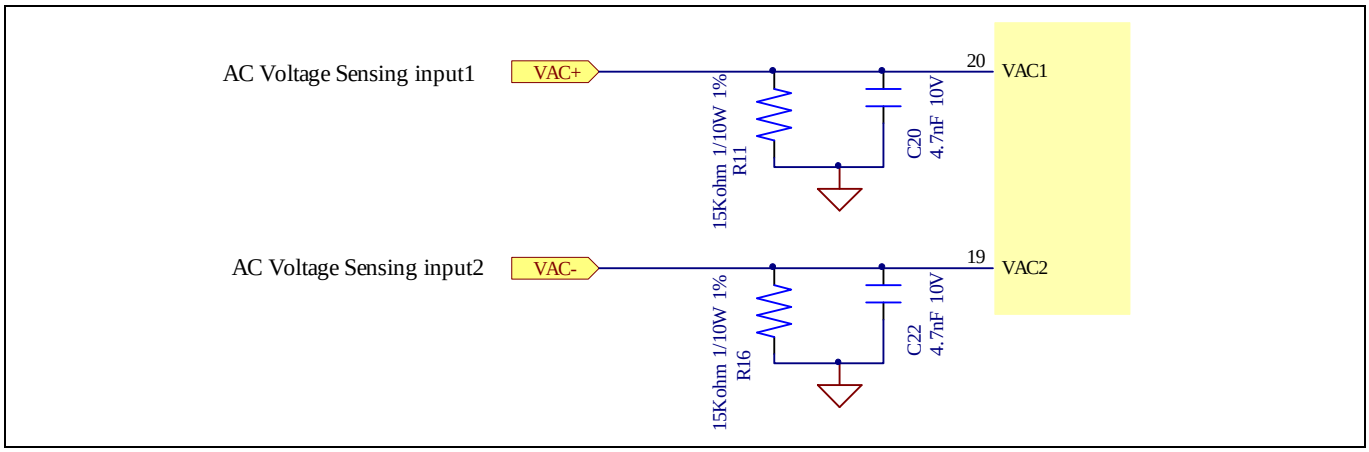

Figure 20 The AC Voltage sensing schematic

There are two AC voltage sensing modes in MCEWizard, differential mode and single-ended as shown in Figure 21. The default is differential mode for EVAL-M3-102T evaluation board.

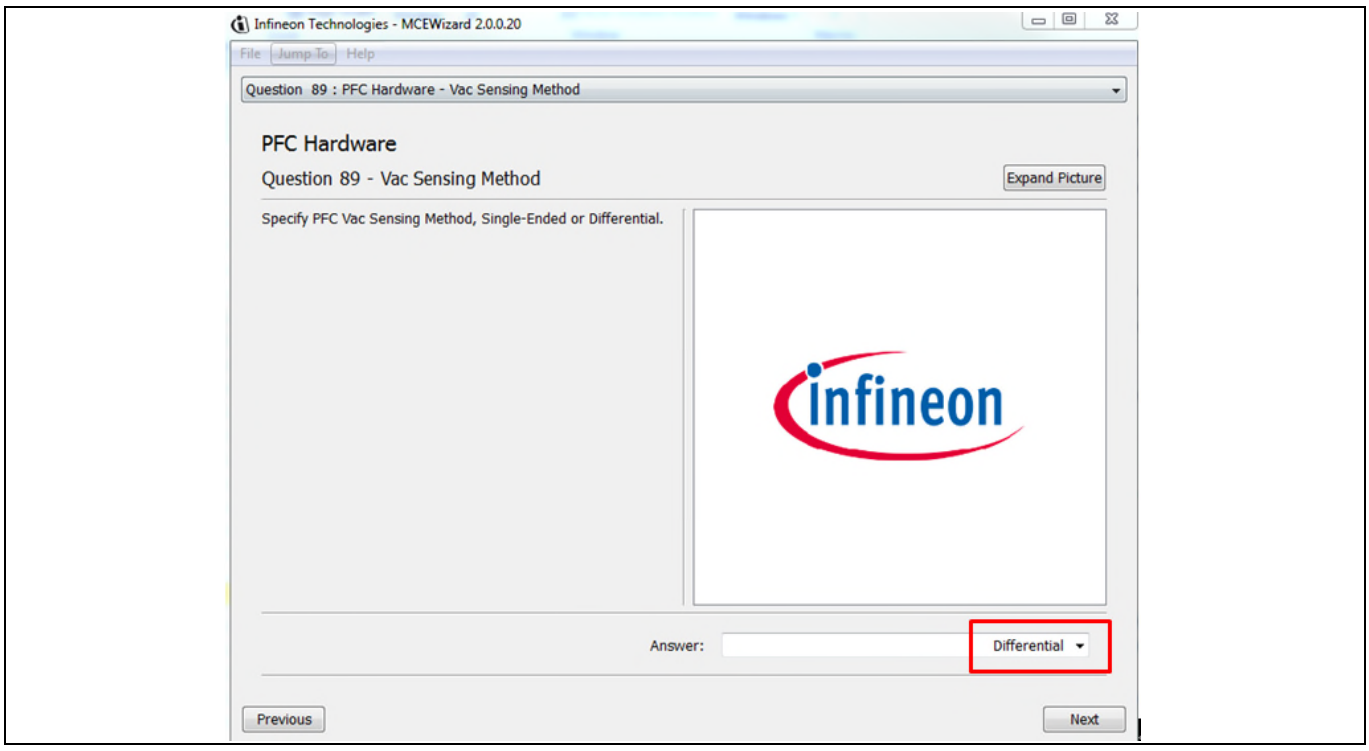

Figure 21 Analog inputs on the EVAL-M3-102T evaluation board

The low side resistor R11 or R16 for the AC voltage sensing resistor divider on the controller board EVAL-M3-102T is 15kΩ, and should be configured in MCEWizard as shown in Figure 22. For the high side resistor value, please refer to the User Manual of the corresponding power board.

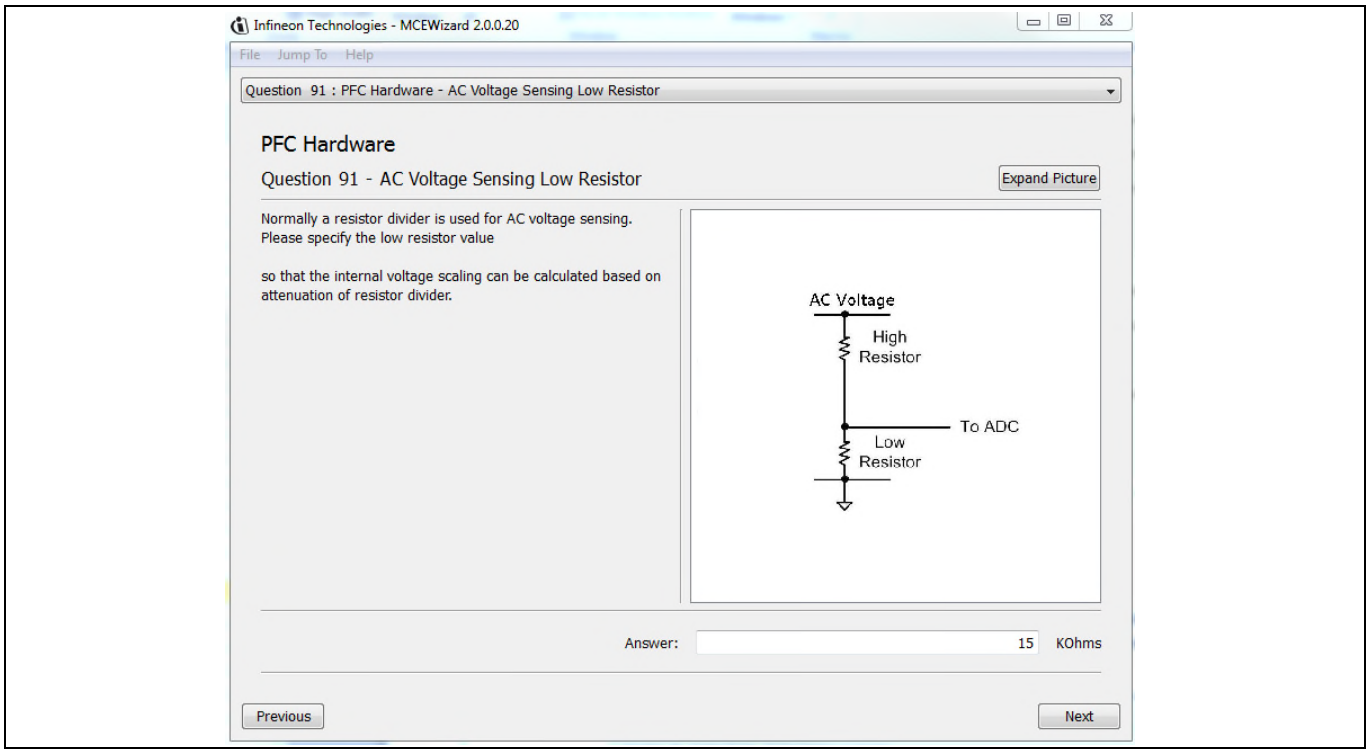

Figure 22 AC Voltage sensing configuration in MCEWizard

5.3 EVAL-M3-102T analog inputs and their MCEWizard setup

Besides current sensing inputs, IMC102T-F064 provides number of analog inputs for different system functions. Figure 23 depicts analog inputs of the IMC102T-F064 except current sensing inputs.

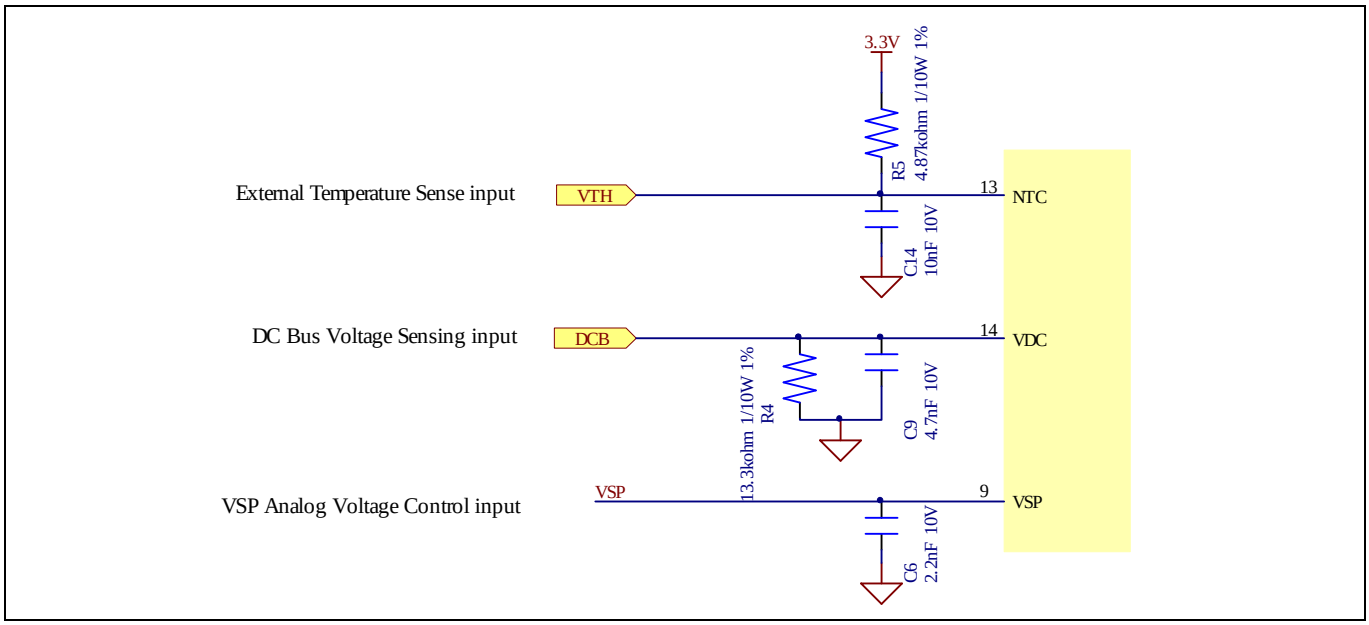

Figure 23 Analog inputs on the EVAL-M3-102T evaluation board

5.3.1 DC bus sensing configuration

The low side resistor R4 for the DC bus sensing resistor divider on the controller board EVAL-M3-102T is 13.3kΩ, and should be configured in MCEWizard as shown in Figure 24. For the high side resistor value, please refer to the User Manual of the corresponding power board.

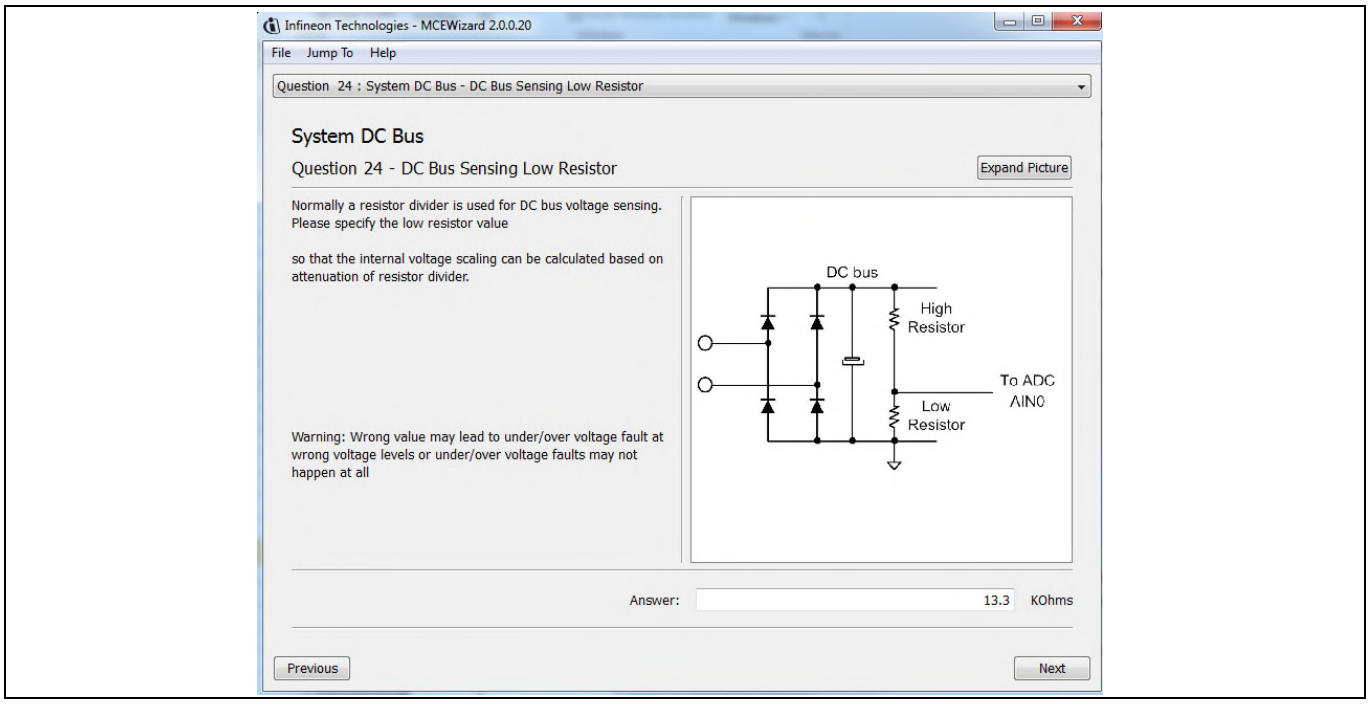

Figure 24 DC bus sensing configuration in MCEWizard

5.3.2 NTC shutdown value calculation and configuration

External NTC Temperature shutdown value can be calculated as shown below and configured in MCEWizard as shown in Figure 25. For pull-up resistor on evaluation power board and NTC value, please refer to the power board's User Manual. The value of pull-up resistor on EVAL-M3-102T is 4.87 kΩ (see Figure 23).

$$R_{total\ pull-up} = \frac{R_{pull-up\ on\ Control\ board} * R_{pull-up\ on\ Power\ board}}{R_{pull-up\ on\ Control\ board} + R_{pull-up\ on\ Power\ board}}$$

$$V_{shut\ down} = \frac{R_{NTC@setting\ temperature}}{R_{NTC@setting\ temperature} + R_{total\ pull-up}} V_{DD}$$

For example, for EVAL-M3-CM615PN, the pull-up resistor on the power board is 9.1kΩ. So the total pull-up resistance calculates to be 3.172kΩ.

The typical value of R_{NTC} at 100°C is 5.388kΩ for IPM IFCM15P60GD which is used in EVAL-M3-CM615PN. If the setting temperature is 100°C, the shutdown value should be 2.08V.

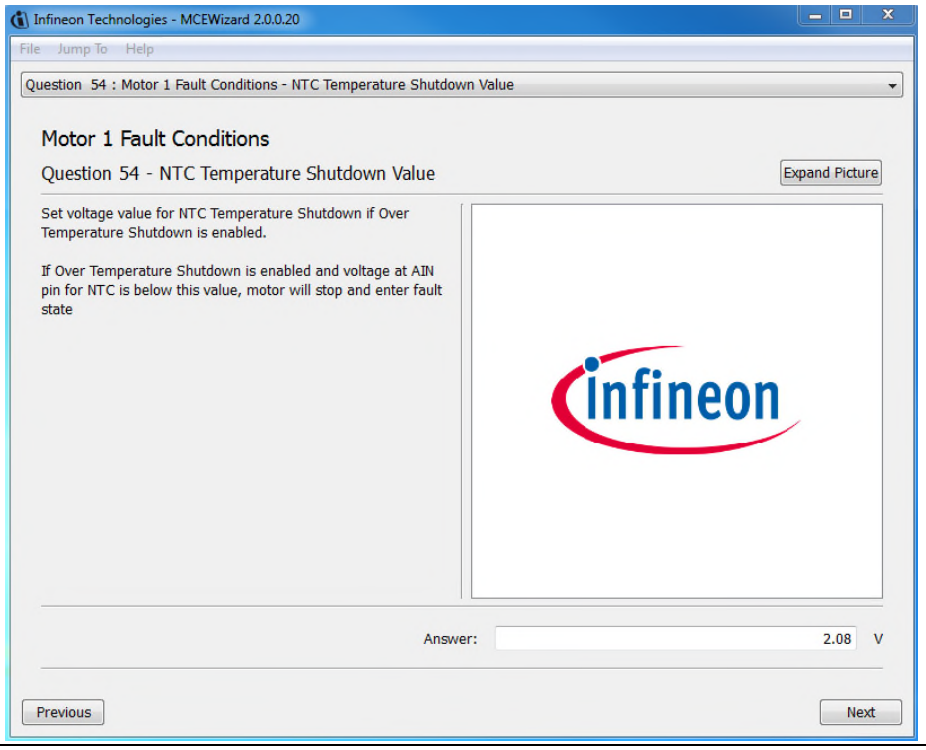

Figure 25 External temperature sense input configuration in MCEWizard

5.3.3 VSP analog input control mode and PGout configuration

VSP analog input control mode can be configured in the options page for MCEWizard by clicking and selecting in the pull down list marked with red box as shown in Figure 26.

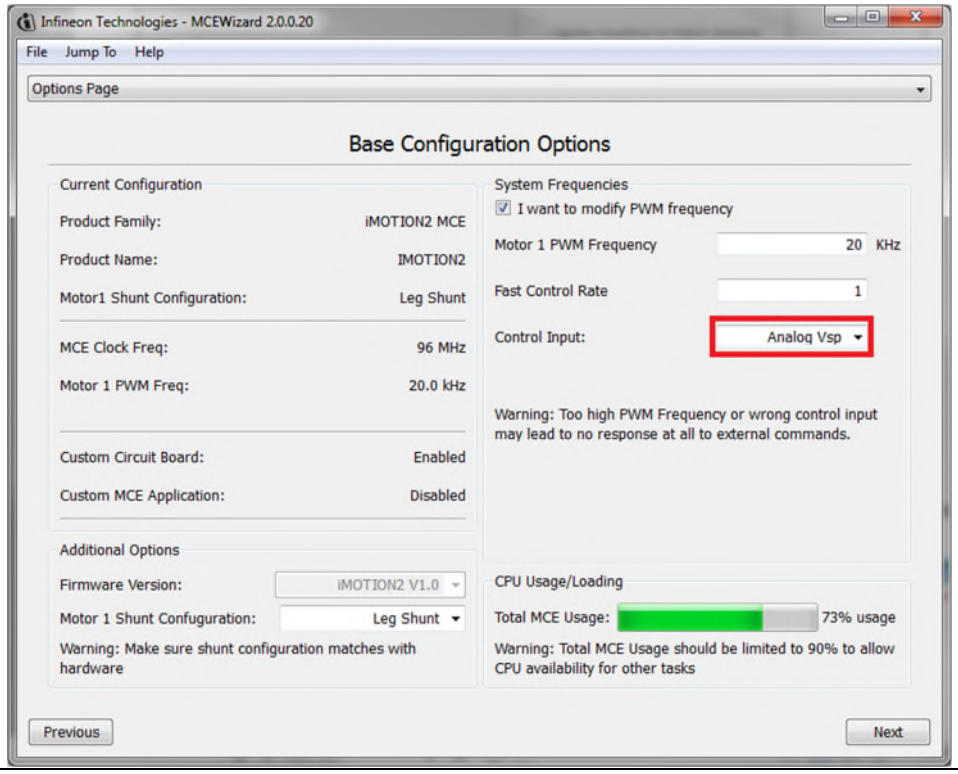

Figure 26 Analog VSP control input mode configuration

There are three input thresholds (percentage of controller supply voltage VDD) used to define the relationship between VSP input voltage and TargetSpeed.

1. T1 (Input threshold for motor start): if the VSP analog voltage is above this threshold, motor will start

2. T2 (Input threshold for motor stop): if the VSP analog voltage is below this threshold, motor will stop

3. T3 (Input threshold for Max RPM): if the VSP analog voltage is higher or equal to this threshold, TargetSpeed will be 16384 which is Max RPM.

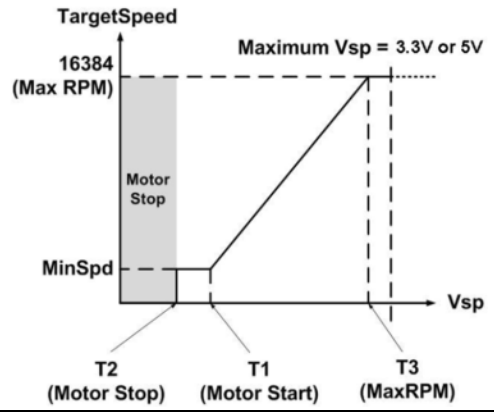

Figure 27 The relationship between VSP Analog Input voltage and TargetSpeed

After configured the Analog VSP control input mode, the three input thresholds can be set up in the input text box in MCEWizard marked with red box as shown in Figure 28, or in the pages for Question 9, Question10 and Question 11.

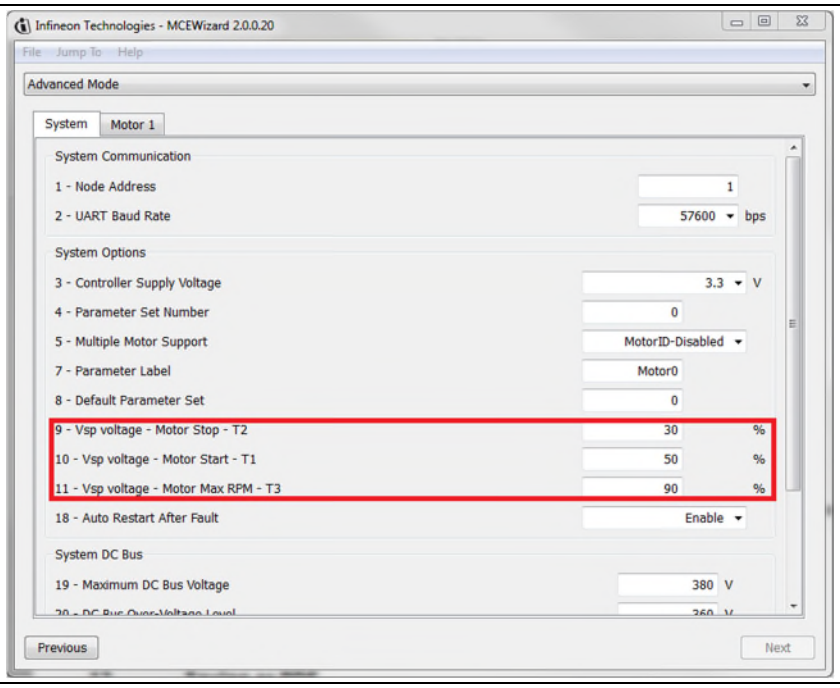

Figure 28 Three input thresholds configuration for VSP analog input control mode

For Analog VSP control input mode, the motor speed can be calculated by measuring the frequency of PGOUT signal output of control IC IMC102T-F064. And the pulse generation number per revolution for motor can be configured in MCEWizard as shown in Figure 29.

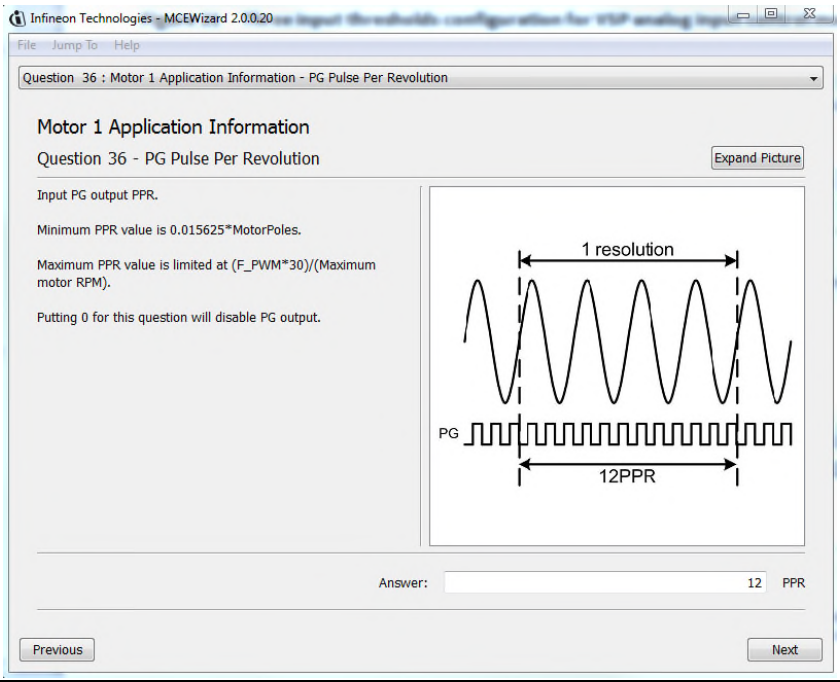

Figure 29 PG Pulse Per Revolution configuration

Motor speed can be calculated as shown below,

$$Motor\ speed(RPM) = \frac{PGOUT\ Freuqency(Hz) * 60s}{Pulse\ Per\ Revolution}$$

For example, PGOUT frequency is about 80 Hz and Pulse per Revolution is 6, and then the motor speed will be 800 RPM.

By default, VDD is 3.3V for EVAL-M3-102T. The input of VSP and PGOUT (pulse generation output) should be limited within the voltage range of 0 and 3.3V. While for some application, PGOUT should be connected to speed measurement circuit. The evaluation board EVAL-M3-102T provides FG (Frequency Generation) signal with an open drain structure controlled by PGOUT as shown in Figure 30. And FG signal can be pull up to 30V.

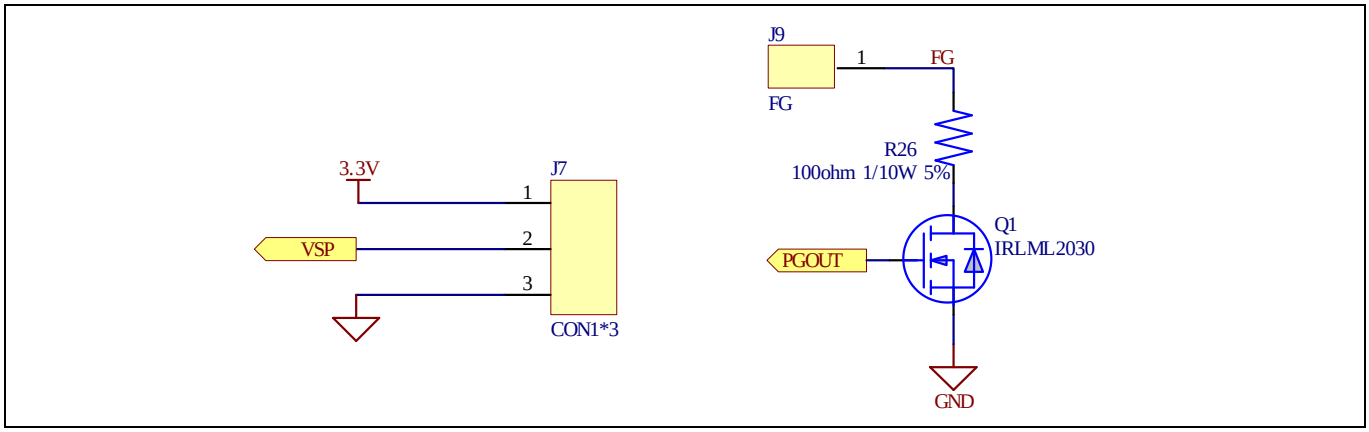

Figure 30 VSP Input Connector and level shit schematic for FG

5.4 Schematics overview

Figure 31 shows the schematic of EVAL-M3-102T evaluation board with IMC102T-F064 controller.

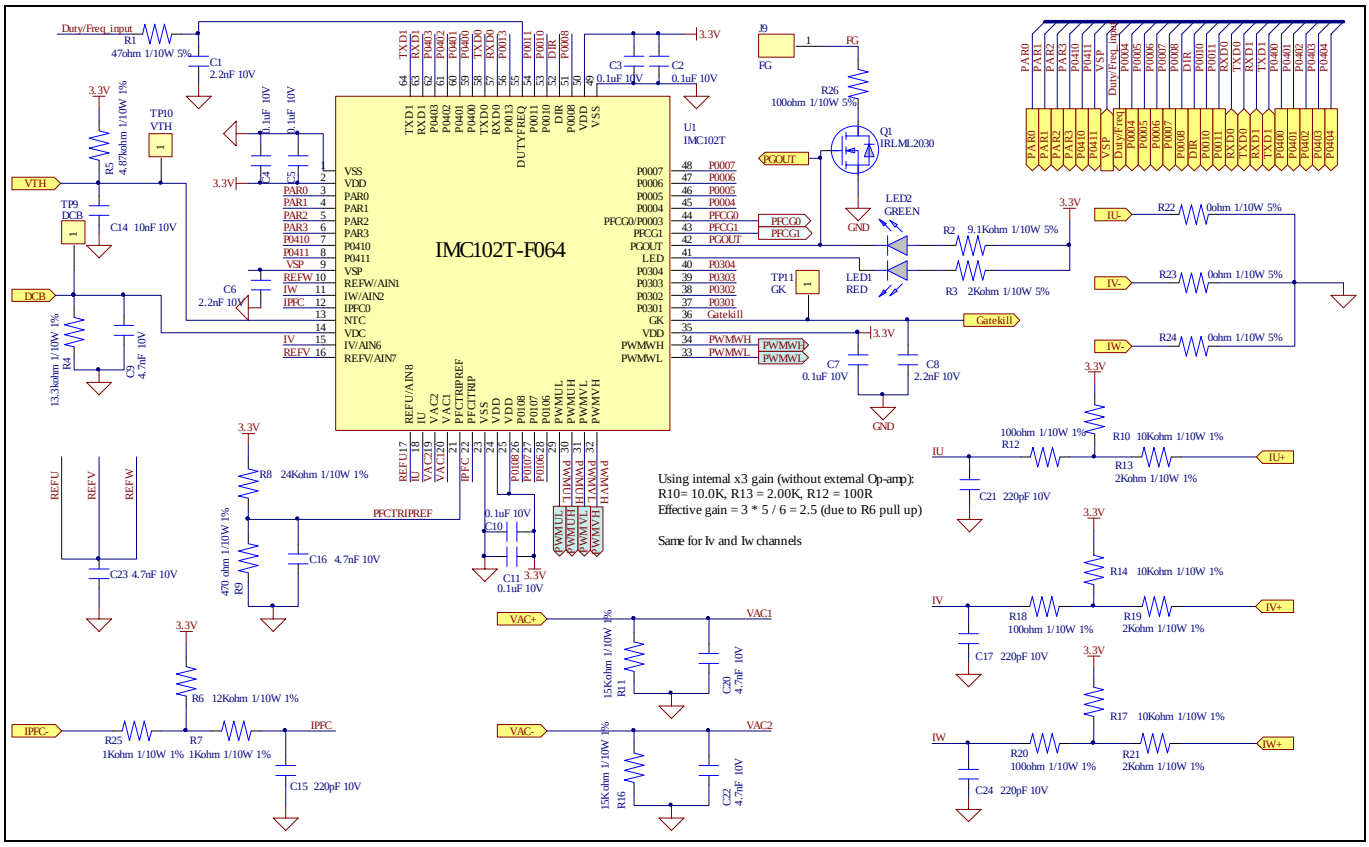

Figure 31 The schematics for the EVAL-M3-102T evaluation board

Figure 32 shows the signal test pin connector schematic for EVAL-M3-102T.

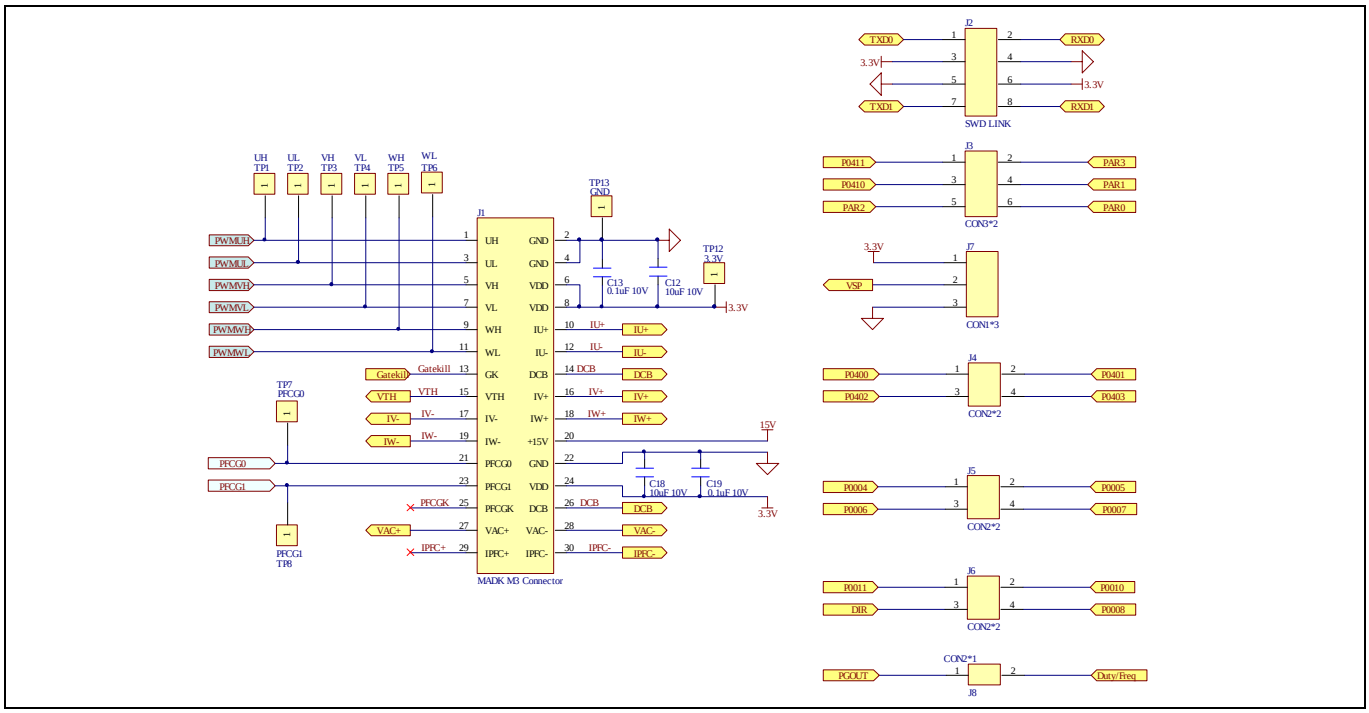

Figure 32 Signal test pin connector schematics for the EVAL-M3-102T evaluation board

5.5 PCB layout overview

The layout of this board can be used for different voltage or power classes of power board. The PCB has two electrical layers with 35µm copper by default and its size is 65 mm × 45 mm. The PCB board thickness is 1.6mm. Check the Infineon's website or get in contact with Infineon's technical support team to get more detailed information and the latest Gerber-files.

Figure 33 illustrates the top assembly print and top paste layers of the evaluation board.

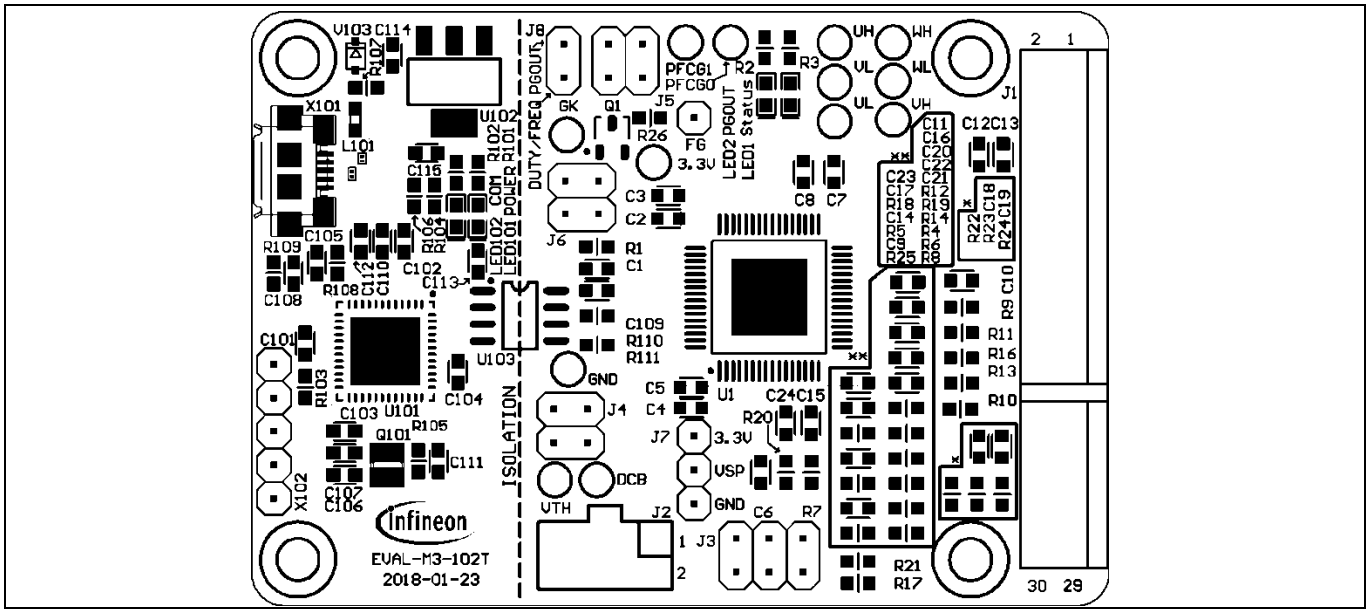

Figure 33 Top overlay print of the EVAL-M3-102T evaluation board

Figure 34 depicts the bottom assembly print of the evaluation board.

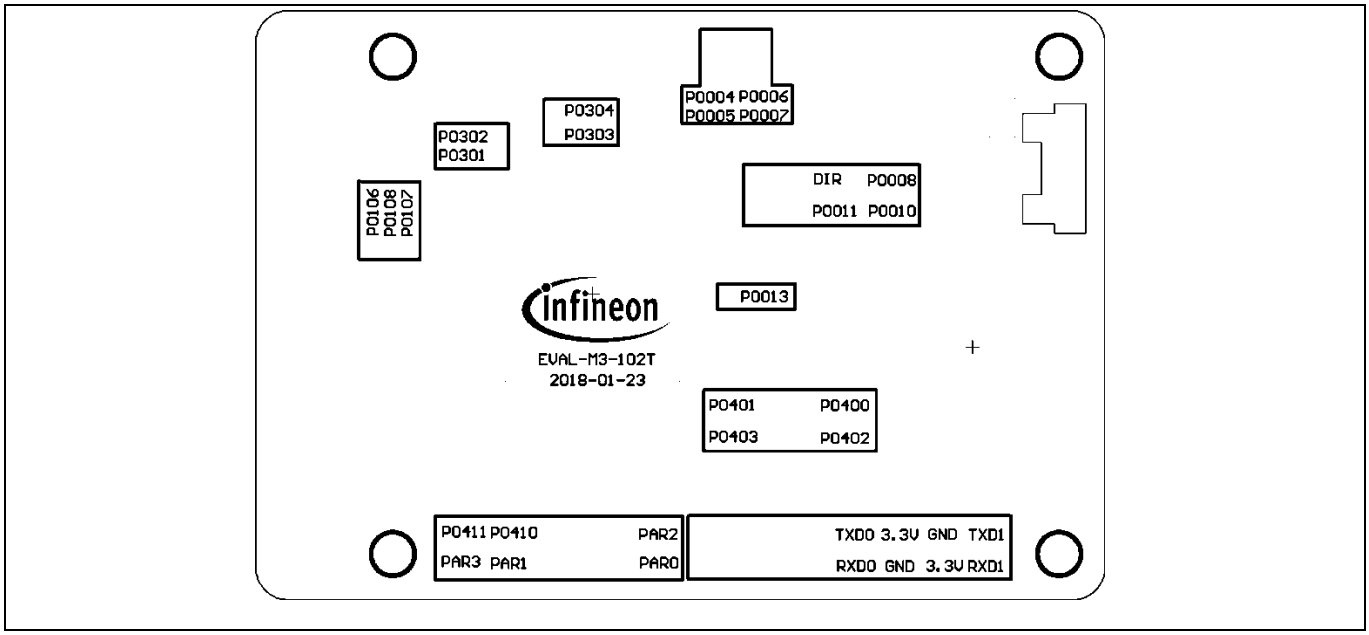

Figure 34 Bottom overlay print of the EVAL-M3-102T evaluation board

The top layer routing of the PCB is provided in the following Figure 35.

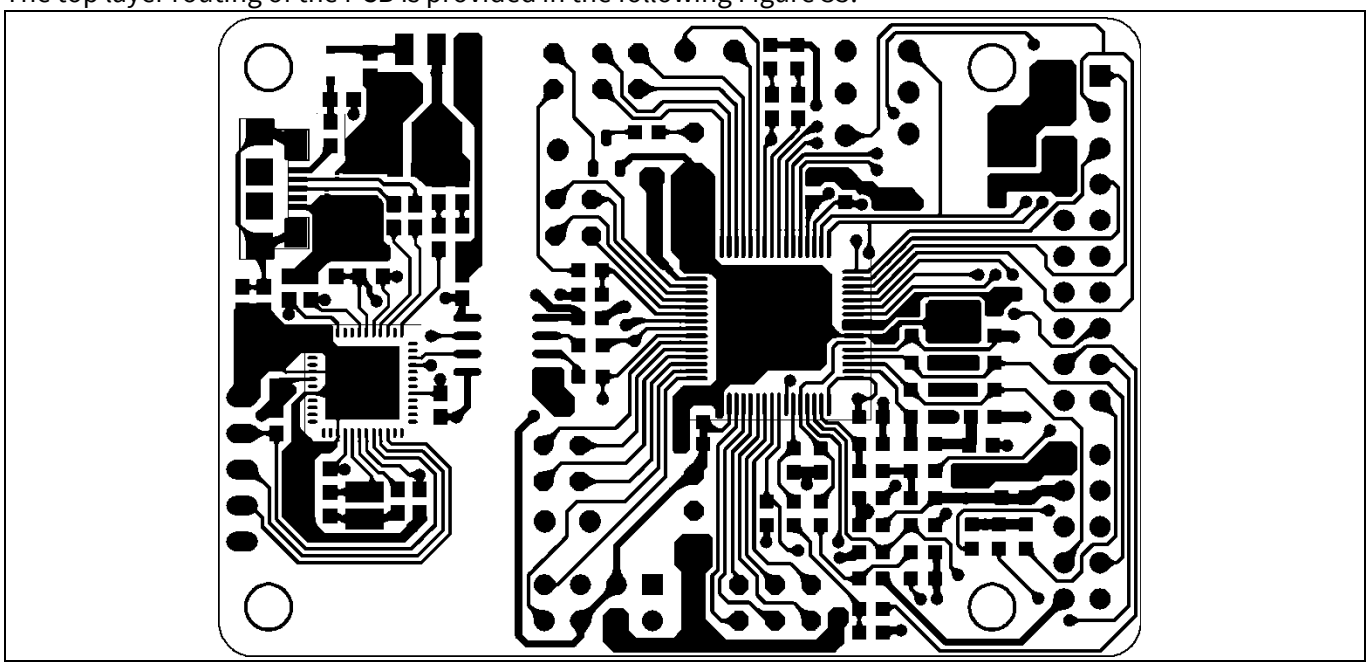

Figure 35 Top layer routing of the EVAL-M3-102T

Figure 36 illustrates the bottom layer routing of the PCB.

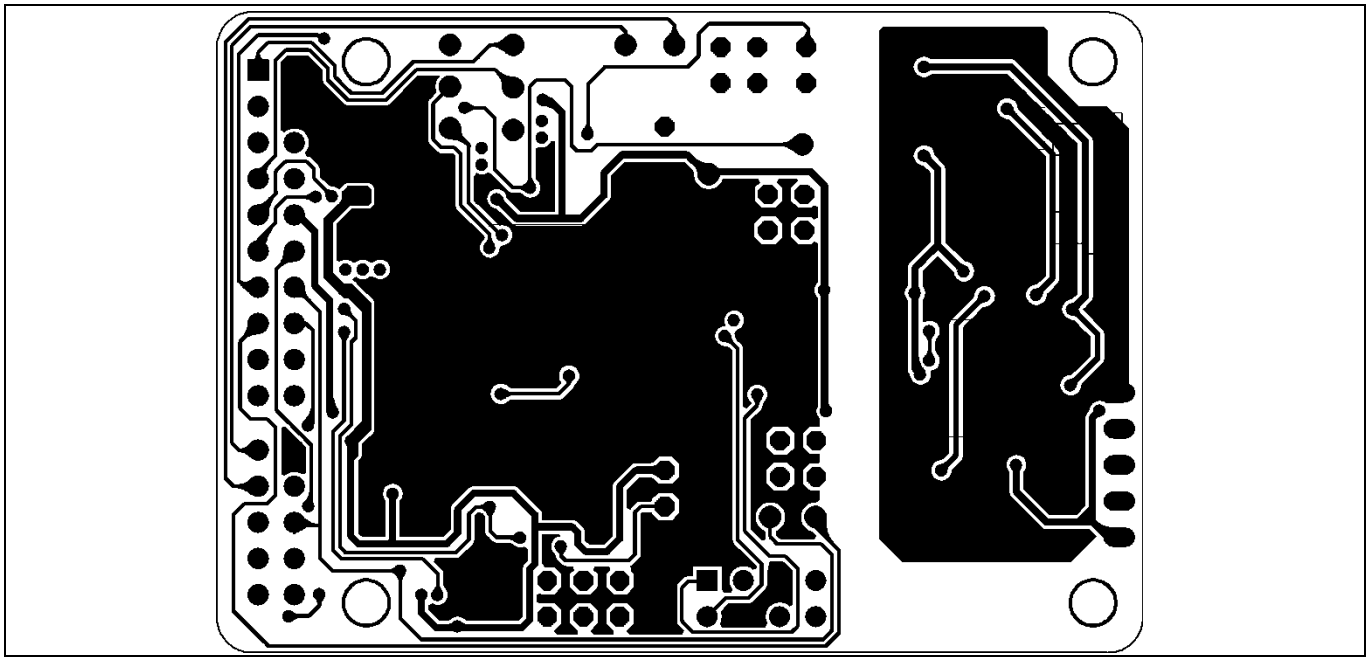

Figure 36 Bottom layer routing of the EVAL-M3-102T

6 Bill of material

Table 14 provides the complete bill of materials for the EVAL-M3-102T board.

Table 14 Bill of materials

No.	Qty.	Part description	Designator	Part Number	Manufacturer
1	3	CAP SMD 2.2nF 16V 0603	C1, C6， C8	CC0603KRX5R6BB106	Yageo
2	9	CAP SMD 0.1uF 16V 0603	C2, C3, C4, C5, C7,C10, C11, C13, C19	885012206020	Wurth Electronics Inc.
3	5	CAP SMD 4.7nF 16V 0603	C9, C16,C20, C22, C23	885012206012	Wurth Electronics Inc.
4	5	CAP SMD 10uF 16V 0603	C12, C18, C105, C114, C115	885012206014	Wurth Electronics Inc.
5	1	CAP SMD 10nF 16V 0603	C14	885012206010	Wurth Electronics Inc.
6	4	CAP SMD 220pF 16V 0603	C15, C17, C21, C24	885012206020	Wurth Electronics Inc.
7	7	CAP SMD 100nF 16V 0603	C101, C102, C103, C104, C108, C110, C111	885012206004	Wurth Electronics Inc.
8	2	CAP SMD 15pF 16V 0603	C106, C107	885012206020	Wurth Electronics Inc.
9	2	CAP SMD 1uF 16V 0603	C109, C113	885012006003	Wurth Electronics Inc.
10	1	CAP SMD 4.7uF 16V 0603	C112	885012206026	Wurth Electronics Inc.
11	1	RES SMD 1/10W 47ohm 0603 5%	R1	RC0603JR-0747RL	Yageo
12	2	RES SMD 1/10W 9.1Kohm 0603 5%	R2,R101	RC0603JR-079K1L	Yageo
13	2	RES SMD 1/10W 2Kohm 0603 5%	R3, R102	RC0603JR-072KL	Yageo
14	1	RES SMD 1/10W 13.3kohm 0603 1%	R4	RC0603FR-0713K3L	Yageo
15	1	RES SMD 1/10W 4.87kohm 0603 1%	R5	RC0603FR-074K87L	Yageo
16	1	RES SMD 1/10W 12Kohm 0603 1%	R6	RC0603FR-0712KL	Yageo
17	2	RES SMD 1/10W 1Kohm 0603 1%	R7, R25	RC0603FR-071KL	Yageo
18	1	RES SMD 1/10W 24Kohm 0603 1%	R8	RC0603FR-0724KL	Yageo
19	1	RES SMD 1/10W 470 ohm 0603 1%	R9	RC0603FR-07470RL	Yageo
20	4	RES SMD 1/10W 10Kohm 0603 1%	R10, R14, R17, R108	RC0603FR-0710KL	Yageo
21	2	RES SMD 1/10W 15Kohm 0603 1%	R11, R16	RC0603FR-0715KL	Yageo

No.	Qty.	Part description	Designator	Part Number	Manufacturer
22	3	RES SMD 1/10W 100ohm 0603 1%	R12, R18, R20	RC0603FR-07100RL	Yageo
23	3	RES SMD 1/10W 2Kohm 0603 1%	R13, R19, R21	RC0603FR-072KL	Yageo
24	5	RES SMD 0ohm 1/10W 0603 5%	R22, R23, R24, R110, R111	RC0603JR-070RL	Yageo
25	1	RES SMD100ohm 1/10W 0603 5%	R26	RC0603JR-07100RL	Yageo
26	1	RES SMD 1/10W 10kohm 0603 5%	R103	RC0603JR-0710KL	Yageo
27	2	RES SMD 1/10W 33ohm 0603 5%	R104,R106	RC0603JR-0733RL	Yageo
28	1	RES SMD 1/10W 510ohm 0603 1%	R105	RC0603FR-07510RL	Yageo
29	1	RES SMD 1/10W 4.7Kohm 0603 1%	R107	RC0603FR-074K7L	Yageo
30	1	RES SMD 1/10W 1Mohm 0603 5%	R109	RC0603JR-071ML	Yageo
31	1	CONN HEADER VERT DUAL 8POS 2.54	J2	61300821121	Wurth Electronics Inc.
32	1	CONN HEADER DUAL 30 POS RA 2.54	J1	61303021021	Wurth Electronics Inc.
33	1	CONN HEADER VERT DUAL 6POS 2.54	J3	61300621121	Wurth Electronics Inc.
34	1	CONN HEADER VERT DUAL 4POS 2.54	J4,J5,J6	61300421121	Wurth Electronics Inc.
35	1	CONN HEADER VERT SING 3POS 2.54	J7	61300311121	Wurth Electronics Inc.
36		CONN HEADER VERT DUAL 2POS 2.54	J8	61300221121	Wurth Electronics Inc.
37		CONN HEADER VERT SING 1POS 2.54	J9	61300111121	Wurth Electronics Inc.
38	1	FERRITE BEAD 60Ω 0603 1LN	L101	BLM18PG600	Murata Electronics North America
39	1	LED RED CLEAR 0603 SMD	LED2	150060RS75000	Wurth Electronics Inc.
40	2	LED BLUE CLEAR 0603 SMD	LED102	150060BS75000	Wurth Electronics Inc.
41	1	LED GREEN CLEAR 0603 SMD	LED1,LED101	150060GS75000	Wurth Electronics Inc.
42	1	MOSFET N-CH 30V 2.7A SOT-23-3	Q1	IRLML2030	Infineon Technologies
43	1	OSC 12.0000MHz SMD	Q101	12MHz/S/3.2X2.5	Quarz
44	10	TEST POINT PC MINI .040"D BLACK	TP1/UH, TP2/UL, TP3/VH, TP4/VL, TP5/WH, TP6/WL, TP7/PFCG0,	5001	Keystone Electronics

No.	Qty.	Part description	Designator	Part Number	Manufacturer
			TP8/PFCG1, TP9/DECSENSE, TP10/VTH, TP11/GK, TP12/3.3V, TP13/GND		
45	1	IC MCU 32BIT 128KB FLASH 64TSSOP	U1	IMC102T-F064	Infineon Technologies
46	1	IC MCU 32BIT 256KB FLASH 48VQFN	U101	XMC4200-Q48F256 BA	Infineon Technologies
47	1	IC REG LINEAR 3.3V 1A SOT223-4	U102	IFX1117-ME V33	Infineon Technologies
48	1	DGTL ISO 3.75KV GEN PURP 8SOIC	U103	SI8621EC-B-IS	Silicon Labs
49	2	TVS DIODE 17VC WLL-2-1	V101, V102	ESD237-B1-W0201	Infineon Technologies
50	1	DIODE SCHOTTKY 30V 1A SOD323-2	V103	BAS3010A-03W	Infineon Technologies
51	1	CONN RCPT MICRO USB AB SMD R/A	X101	ZX62-AB-5PA	Hirose Electric Co Ltd

7 Reference

[1] iMOTION™ IMC100 Series Datasheet

[2] iMOTION™ IMC100 Software Reference Manual

[3] MCEWizard User Guide

[4] MCEDesigner User Guide

Note: All listed reference materials are available for download on Infineon's website www.infineon.com/imotion. All the iMOTION™ MADK power board's User Manuals are available at www.infineon.com/MADK

Revision history

Document version	Date of release	Description of changes
1.0	2018-02-22	First Release
1.1	2018-04-02	Plus small modifications
1.5	2018-11-28	Plus small modifications

Trademarks
All referenced product or service names and trademarks are the property of their respective owners.

Edition 2018-11-28

Published by

Infineon Technologies AG

81726 Munich, Germany

© 2018 Infineon Technologies AG. All Rights Reserved.

Do you have a question about this document?

Email: erratum@infineon.com

Document reference
AN2018-02

IMPORTANT NOTICE

The information contained in this application note is given as a hint for the implementation of the product only and shall in no event be regarded as a description or warranty of a certain functionality, condition or quality of the product. Before implementation of the product, the recipient of this application note must verify any function and other technical information given herein in the real application. Infineon Technologies hereby disclaims any and all warranties and liabilities of any kind (including without limitation warranties of non-infringement of intellectual property rights of any third party) with respect to any and all information given in this application note.

The data contained in this document is exclusively intended for technically trained staff. It is the responsibility of customer's technical departments to evaluate the suitability of the product for the intended application and the completeness of the product information given in this document with respect to such application.

For further information on the product, technology delivery terms and conditions and prices please contact your nearest Infineon Technologies office (**www.infineon.com**).

WARNINGS

Due to technical requirements products may contain dangerous substances. For information on the types in question please contact your nearest Infineon Technologies office.

Except as otherwise explicitly approved by Infineon Technologies in a written document signed by authorized representatives of Infineon Technologies, Infineon Technologies' products may not be used in any applications where a failure of the product or any consequences of the use thereof can reasonably be expected to result in personal injury.